# FPS Series Ceiling Mount Air Handling Units

Dunnair (Aust) PtyLtd

**Head Office: 140 Bernard Street, Cheltenham VIC 3192**
**Ph 03 8586 8200? Fax 03 8586 8201**
**Email salesaust@dunnair.com.au Web site www.dunnair.com.au**

| | | | |
|---|---|---|---|
| **Dunnair New South Wales:** | Ph 02 9674 1577 | Fax 02 9674 1588 | Email salesnsw@dunnair.com.au |
| **Dunnair Victoria:** | Ph 03 9558 7001 | Fax 03 9551 1644 | Email salesvic@dunnair.com.au |
| **Dunnair Queensland:** | Ph 07 3890 8796 | Fax 07 3890 8642 | Email salesqld@dunnair.com.au |
| **Dunnair SA & NT:** | Ph 08 8240 2888 | Fax 08 8240 2777 | Email salessa@dunnair.com.au |
| **Western Australia: Turner Engineering** | Ph 08 9418 2444 | Fax 08 9418 2100 | Email saleswa@dunnair.com.au |
| **Tasmania:** | Ph 0418 756 643 | Fax 03 6425 3531 | Email salestas@dunnair.com.au |


DUNNAIR (Aust) Pty Ltd

## >> FPS Series Ceiling Mount Air Handling Units

>> www.dunnair.com.au

# INTRODUCTION

When you mention the name Dunnair in the air conditioning industry, it is certainly a name that many people recognise.
Dunnair has been proud suppliers to the commercial air conditioning industry for more than 48 years under such names as Dunn Air Conditioning and more recently Dunnair International and Dunnair Australia.
Intrinsic to the success Dunnair has enjoyed in the Australian market, is the professional support provided to customers and the company is proud to continue its long tradition of supplying the industry with a quality driven range of products.

In the early days Dunnair was a manufacturer for Airtemp and produced high sales figures under the guidance of Rob Dunn. Later, the South Australian office of Dunnair began to manufacture and sell Chrysler air conditioners. The South Australian office was one of five separate offices nationally with headquarters based as it is now, in Melbourne.

In 1983 the manufacturing arm of the company was sold to EmailAir and Dunnair focused on sales and in particular service. Dunnair held dozens of maintenance contracts with McDonalds stores across Victoria and were one of the very few companies to perform maintenance on Cosatron units that were installed at the Crown Casino.

The company was the first in Victoria to import Sanyo units which is why many people in the industry still associate us with Airtemp and Sanyo. In the early 1990's Dunnair began to badge Derby by Dunnair wall mounted split units and this continued well into the mid 90's.

By 1994 the success of the company had not gone unnoticed and was bought by Multistack who renamed the company Dunnair International. The company remained in this state until 2004 when Ernest Ugazio acquired the sales then service departments of Dunnair. The company split into Dunnair International which focused on Multistack Chiller sales and spare parts; while Dunnair Australia began design and development of a split ducted and rooftop packaged range and commenced manufacture in China.

The Dunnair rooftop packaged and split ducted range of air conditioners are among the industry's best and available in a wide range of sizes from 6kW up to 200kW. Rooftop packaged units from 8kW to 90kW are standard side-by-side supply and return air and all units including the split ducted models have turn-handles for easy and quick access to service compartments, which eliminates timely screw-removal.

Mindful of environmental requirements for improved energy efficiency, Dunnair accepted the challenge and now offer Economy Cycle inbuilt to rooftop packaged and split ducted units. Dunnair Economy Cycle packaged and split ducted units are an energy efficient solution based on a smart design platform of inbuilt motorised dampers and filters which provide a resourceful and cost effective method of on-site unit installation.

Dunnair units are manufactured in accordance with strict quality control standards and for Australian conditions. Direct input into factory design enables Dunnair to produce non-standard units for specialised projects. Any non-standard designs can be catered for including down-discharge supply air, side discharge supply air and also inverter technology.

Our quality range also includes wall mounted splits, floor/underceiling units and ceiling cassettes.

The company regularly redevelops and improves its range of products and brings them in line with cutting-edge technology and Dunnair now enters an exciting new phase.

As well as our traditional air cooled products, we are now pleased to offer the market an additional range including - packaged air handling units, packaged and split water source heat pump units, water cooled ceiling cassette units, air cooled and water cooled temperature and humidity control units, packaged super slim ceiling mounted units, floor mounted units including water source heat pumps, water cooled central station units, fan coils, heat exchangers and energy recovery ventilators.

Within this catalogue we are pleased to provide our range of **FPS Series Ceiling Mount Air Handling Units.**

**If you have any further questions about our products, please contact us:**
**Email: sales@dunnair.com.au Ph: 61 3 8552 1200 or free call 1300 724 660 Facs: 61 3 8552 1201**

**Dunnair Queensland**
**Phone: 61 7 3899 5866**

**Dunnair South Australia & Northern Territory**
**Ph: 61 8 8293 8433**

**Dunnair New South Wales**
**Ph: 61 2 9674 1577**
**Mobile: 0414 855 501**

**New Zealand Agent**
**Energy Products International**
**Phone: 64 7 839 2705**

DUNNAIR (Aust) Pty Ltd
10 Cochranes Road
Moorabbin
Victoria, 3189
Australia
Phone:1300724660

## CONTENTS

| | Page |
|---|---|
| Dunnair | 01 |
| Description | 02 |
| Model Nomination | 02 |
| Structure | 03 |
| Performance Data | 04 |
| ESP-Airflow Diagram | 16 |
| Drawings&Dimension | 18 |
| Wiring diagram | 21 |
| Installation, Operation & Maintenance | 21 |

★ **CONVERSION:**

**1kw=3412Btu/h=859.8kcal/h=0.284 usRT**

**1m³/h(CMH)=0.5885ft³/min(CFM); 1kg=2.2lb; °F=9/5x°C+32**

**1pa=0.101972mm$H_2O$; 1Kpa=7.50062mmHg=0.14504psi**

## DESCRIPTION

- Eleven air volume specifications. Air volume 413 to 4131 L/S
- Cooling capacity 8.4-241.4KW，Heating capacity16.8-258.7KW。
- Use forward-curved centrifugal fan and external-rotor speed regulating motor，compact structure，small vibration 100% dynamically balance，stably running。
- Galvanized steel casing，with 25mm thick PE. insulation，good appearance，lightweight，compact structure，save installment space
- Heat exchanger adopts high efficiency fin，through strict water process，can work under high humidity condition.
- According to customer requirement，add frequency inverter，electric heater， humidifier，etc

## MODEL NOMINATION

| FPS | 15 | A | U | Z | V |
|---|---|---|---|---|---|
| 1 | 2 | 3 | 4 | 5 | 6 |

1--FPS：Super Slim AHU
2--Airflow code:413 l/s
3--A： PhaseMark
4--Units Type N：Fresh air type, Slandard Ceil(four rows),Standard Fan
P：Fresh air type, Standard Ceil(four rows),High Static Pressure Fan
U：Fresh air type, High Efficiency Ceil(six rows),Standard Fan
X：Fresh air lype, High Efficiency Coil(six rows),High Stalic Pressure Fan
M：Return air type, Standard Coil(feur rews),Standard Fan
T：Return air type, Slandard Ceil(four rows),High Slatic Pressure Fan
Q：Return air type, High Efficiency Coil(six rows),Standard Fan
Y：Return air type, High Efficiency Coil(six rows),High Static Pressure Fan
5--Handing：Z：left hand
blank, right hand (facing refurn air)
6--V： 380V/50Hz/3PH
K： 415V/50HZ/3PH

## STRUCTURE

### FPS15～30A Series

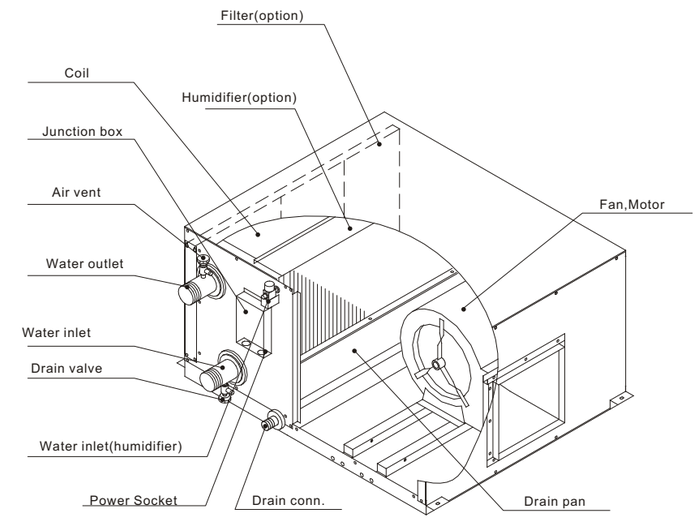


### FPS40～150A Series

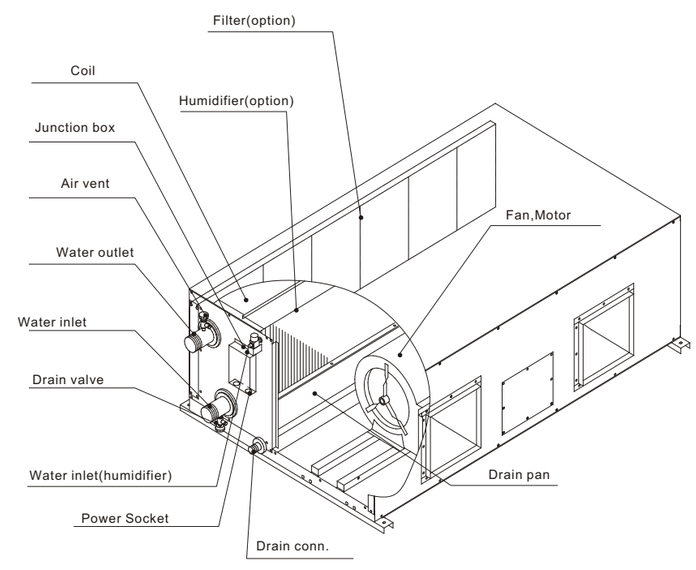

# PERFORMANCE DATA

## Performance Data of high static pressure units

### Fresh air condition

Cooling:Entering air temp.95˚F(35˚C)DB 82.4˚F(28˚C)WB,water inlet 44.6˚F(7˚C),water outlet 53.6˚F(12˚C)
Heating:Entering air temp.44.6˚F(7˚C)DB 140 ˚F(60˚C)WB Water flow rate of heating system is the same as cooling system.

| Performance / Model | Air flow (L/S) | Pressure (pa) | Noise dB(A) | Four rows | | | Six rows | | | Water Resistance (Kpa) | Power (KW) | Weight (KG) |
|---|---|---|---|---|---|---|---|---|---|---|---|---|
| | | | | Cooling Capacity (KW) | Heating Capacity (KW) | Water Flow (l/min) | Cooling Capacity (KW) | Heating Capacity (KW) | Water Flow (l/min) | | | |
| FPS15AP(Z)V | 413 | 300 | 58 | 22 | 22.3 | 63.1 | | | | 65 | 0.45 | 83 |
| FPS15AX(Z)V | | 250 | | | | | 24.9 | 23.8 | 71.4 | 20 | | 86 |
| FPS20AP(Z)V | 551 | 300 | 59 | 27.2 | 28.8 | 78 | | | | 21 | 0.55 | 93 |
| FPS20AX(Z)V | | 250 | | | | | 34.7 | 32.3 | 99.5 | 41 | | 96 |
| FPS25AP(Z)V | 689 | 300 | 61 | 35.5 | 36.8 | 101.8 | | | | 38 | 0.55 | 101 |
| FPS25AX(Z)V | | 250 | | | | | 44.3 | 40.6 | 127 | 69 | | 106 |
| FPS30AP(Z)V | 826 | 300 | 62 | 43.8 | 44.7 | 125.5 | | | | 58 | 0.55 | 110 |
| FPS30AX(Z)V | | 250 | | | | | 52.1 | 48.4 | 149.4 | 42 | | 116 |
| FPS40AP(Z)V | 1102 | 300 | 61 | 55.1 | 58 | 158 | | | | 23 | 0.55x2 | 150 |
| FPS40AX(Z)V | | 250 | | | | | 70.7 | 65 | 186.5 | 70 | | 157 |
| FPS50AP(Z)V | 1377 | 300 | 61 | 71.7 | 73.9 | 205.5 | | | | 40 | 0.55x2 | 168 |
| FPS50AX(Z)V | | 250 | | | | | 85.3 | 80.3 | 244.5 | 28 | | 177 |
| FPS60AP(Z)V | 1652 | 300 | 62 | 87.7 | 89.3 | 243.3 | | | | 58 | 0.55x2 | 185 |
| FPS60AX(Z)V | | 250 | | | | | 104.7 | 97.1 | 300.3 | 43 | | 196 |
| FPS80AP(Z)V | 2203 | 400 | 63 | 114 | 117.3 | 324.4 | | | | 57 | 1.0x2 | 257 |
| FPS80AX(Z)V | | 350 | | | | | 136 | 128.3 | 389.5 | 40 | | 271 |
| FPS100AP(Z)V | 2754 | 450 | 65 | 141.5 | 146.4 | 373.1 | | | | 59 | 1.8x2 | 305 |
| FPS100AX(Z)V | | 400 | | | | | 171.9 | 160.7 | 493 | 49 | | 322 |
| FPS120AP(Z)V | 3305 | 450 | 67 | 169.4 | 175.5 | 437.7 | | | | 60 | 1.8x2 | 343 |
| FPS120AX(Z)V | | 400 | | | | | 206.4 | 192.9 | 592 | 51 | | 363 |
| FPS150AP(Z)V | 4131 | 450 | 68 | 211.5 | 219.1 | 534.9 | | | | 61 | 3.0x2 | 399 |
| FPS150AX(Z)V | | 400 | | | | | 258.7 | 241.4 | 742 | 54 | | 426 |

## Performance Data of high static pressure units

### Return air condition

Cooling:Entering air temp.80.6˚F(27˚C)DB 67.1˚F(19.5˚C)WB,water inlet 44.6˚F(7˚C),water outlet 53.6˚F(12˚C)
Heating:Entering air temp.69.8˚F(21˚C)DB 140 ˚F(60˚C)WB Water flow rate of heating system is the same as cooling system.

| Performance / Model | Air flow (L/S) | Pressure (pa) | Noise dB(A) | Four rows | | | Six rows | | | Water Resistance (Kpa) | Power (KW) | Weight (KG) |
|---|---|---|---|---|---|---|---|---|---|---|---|---|
| | | | | Cooling Capacity (KW) | Heating Capacity (KW) | Water Flow (l/min) | Cooling Capacity (KW) | Heating Capacity (KW) | Water Flow (l/min) | | | |
| FPS15AT(Z)V | 413 | 300 | 58 | 8.4 | 14.5 | 24.1 | | | | 12 | 0.45 | 83 |
| FPS15AY(Z)V | | 250 | | | | | 9.3 | 15.7 | 26.7 | 4 | | 86 |
| FPS20AT(Z)V | 551 | 300 | 59 | 12 | 20.3 | 34.4 | | | | 26 | 0.55 | 93 |
| FPS20AY(Z)V | | 250 | | | | | 13.6 | 21.9 | 39 | 8 | | 96 |
| FPS25AT(Z)V | 689 | 300 | 61 | 15.8 | 25.9 | 45.3 | | | | 46 | 0.55 | 101 |
| FPS25AY(Z)V | | 250 | | | | | 17.9 | 28.2 | 51.5 | 14 | | 106 |
| FPS30AT(Z)V | 826 | 300 | 62 | 16.7 | 29.2 | 47.9 | | | | 11 | 0.55 | 110 |
| FPS30AY(Z)V | | 250 | | | | | 20.6 | 33.1 | 59 | 8 | | 116 |
| FPS40AT(Z)V | 1102 | 300 | 61 | 24 | 40.7 | 68.8 | | | | 23 | 0.55x2 | 150 |
| FPS40AY(Z)V | | 250 | | | | | 31.5 | 46.6 | 90.3 | 48 | | 157 |
| FPS50AT(Z)V | 1377 | 300 | 61 | 31.5 | 52.1 | 90.3 | | | | 42 | 0.55x2 | 168 |
| FPS50AY(Z)V | | 250 | | | | | 40.6 | 58.8 | 116.5 | 86 | | 177 |
| FPS60AT(Z)V | 1652 | 300 | 62 | 39.2 | 63.6 | 112.3 | | | | 67 | 0.55x2 | 185 |
| FPS60AY(Z)V | | 250 | | | | | 47.4 | 70 | 136 | 50 | | 196 |
| FPS80AT(Z)V | 2203 | 400 | 63 | 50.5 | 83 | 144.7 | | | | 63 | 1.0x2 | 257 |
| FPS80AY(Z)V | | 350 | | | | | 61.5 | 92.3 | 176.3 | 48 | | 271 |
| FPS100AT(Z)V | 2754 | 450 | 65 | 64.2 | 104.5 | 183.9 | | | | 81 | 1.8x2 | 305 |
| FPS100AY(Z)V | | 400 | | | | | 77.9 | 115.8 | 223.5 | 58 | | 322 |
| FPS120AT(Z)V | 3305 | 450 | 67 | 77.2 | 125.7 | 221.1 | | | | 86 | 1.8x2 | 343 |
| FPS120AY(Z)V | | 400 | | | | | 93.5 | 139.2 | 268.3 | 61 | | 363 |
| FPS150AT(Z)V | 4131 | 450 | 68 | 96.9 | 157.3 | 275.5 | | | | 92 | 3.0x2 | 399 |
| FPS150AY(Z)V | | 400 | | | | | 117.4 | 173.9 | 337 | 66 | | 426 |

## Performance Data of standard units

### Fresh air condition

Cooling:Entering air temp.95˚F(35˚C)DB 82.4˚F(28˚C)WB,water inlet 44.6˚F(7˚C),water outlet 53.6˚F(12˚C)
Heating:Entering air temp.44.6˚F(7˚C)DB 140 ˚F(60˚C)WB Water flow rate of heating system is the same as cooling system.

| Performance / Model | Air flow (L/S) | Pressure (pa) | Noise dB(A) | Four rows | | | Six rows | | | Water Resistance (Kpa) | Power (KW) | Weight (KG) |
|---|---|---|---|---|---|---|---|---|---|---|---|---|
| | | | | Cooling Capacity (KW) | Heating Capacity (KW) | Water Flow (l/min) | Cooling Capacity (KW) | Heating Capacity (KW) | Water Flow (l/min) | | | |
| FPS15AN(Z)V | 413 | 240 | 57 | 22 | 22.3 | 63.1 | | | | 65 | 0.18 | 81 |
| FPS15AU(Z)V | | 200 | | | | | 24.9 | 23.8 | 71.4 | 20 | | 83 |
| FPS20AN(Z)V | 551 | 250 | 58 | 27.2 | 28.8 | 78 | | | | 21 | 0.32 | 89 |
| FPS20AU(Z)V | | 200 | | | | | 34.7 | 32.3 | 99.5 | 41 | | 92 |
| FPS25AN(Z)V | 689 | 290 | 58 | 35.5 | 36.8 | 101.8 | | | | 38 | 0.45 | 99 |
| FPS25AU(Z)V | | 230 | | | | | 44.3 | 40.6 | 127 | 69 | | 104 |
| FPS30AN(Z)V | 826 | 250 | 60 | 43.8 | 44.7 | 125.5 | | | | 58 | 0.55 | 109 |
| FPS30AU(Z)V | | 190 | | | | | 52.1 | 48.4 | 149.4 | 42 | | 115 |
| FPS40AN(Z)V | 1102 | 240 | 60 | 55.1 | 58 | 158 | | | | 23 | 0.32x2 | 142 |
| FPS40AU(Z)V | | 180 | | | | | 70.7 | 65 | 186.5 | 70 | | 149 |
| FPS50AN(Z)V | 1377 | 290 | 60 | 71.7 | 73.9 | 205.5 | | | | 40 | 0.45x2 | 164 |
| FPS50AU(Z)V | | 230 | | | | | 85.3 | 80.3 | 244.5 | 28 | | 173 |
| FPS60AN(Z)V | 1652 | 290 | 59 | 87.7 | 89.3 | 243.3 | | | | 58 | 0.55x2 | 183 |
| FPS60AU(Z)V | | 230 | | | | | 104.7 | 97.1 | 300.3 | 43 | | 194 |
| FPS80AN(Z)V | 2203 | 310 | 59 | 114 | 117.3 | 324.4 | | | | 57 | 0.8x2 | 267 |
| FPS80AU(Z)V | | 250 | | | | | 136 | 128.3 | 389.5 | 40 | | 281 |
| FPS100AN(Z)V | 2754 | 340 | 62 | 141.5 | 146.4 | 373.1 | | | | 59 | 1.1x2 | 307 |
| FPS100AU(Z)V | | 280 | | | | | 171.9 | 160.7 | 493 | 49 | | 324 |
| FPS120AN(Z)V | 3305 | 310 | 63 | 169.4 | 175.5 | 437.7 | | | | 60 | 1.1x2 | 341 |
| FPS120AU(Z)V | | 240 | | | | | 206.4 | 192.9 | 592 | 51 | | 361 |
| FPS150AN(Z)V | 4131 | 320 | 64 | 211.5 | 219.1 | 534.9 | | | | 61 | 1.5x2 | 397 |
| FPS150AU(Z)V | | 250 | | | | | 258.7 | 241.4 | 742 | 54 | | 424 |

## Performance Data of standard units

### Return air condition

Cooling:Entering air temp.80.6˚F(27˚C)DB 67.1˚F(19.5˚C)WB,water inlet 44.6˚F(7˚C),water outlet 53.6˚F(12˚C)
Heating:Entering air temp.69.8˚F(21˚C)DB 140 ˚F(60˚C)WB Water flow rate of heating system is the same as cooling system.

| Performance / Model | Air flow (L/S) | Pressure (pa) | Noise dB(A) | Four rows | | | Six rows | | | Water Resistance (Kpa) | Power (KW) | Weight (KG) |
|---|---|---|---|---|---|---|---|---|---|---|---|---|
| | | | | Cooling Capacity (KW) | Heating Capacity (KW) | Water Flow (l/min) | Cooling Capacity (KW) | Heating Capacity (KW) | Water Flow (l/min) | | | |
| FPS15AM(Z)V | 413 | 240 | 57 | 8.4 | 14.5 | 24.1 | | | | 12 | 0.18 | 83 |
| FPS15AQ(Z)V | | 200 | | | | | 9.3 | 15.7 | 26.7 | 4 | | 86 |
| FPS20AM(Z)V | 551 | 250 | 58 | 12 | 20.3 | 34.4 | | | | 26 | 0.32 | 93 |
| FPS20AQ(Z)V | | 200 | | | | | 13.6 | 21.9 | 39 | 8 | | 96 |
| FPS25AM(Z)V | 689 | 290 | 58 | 15.8 | 25.9 | 45.3 | | | | 46 | 0.45 | 101 |
| FPS25AQ(Z)V | | 230 | | | | | 17.9 | 28.2 | 51.5 | 14 | | 106 |
| FPS30AM(Z)V | 826 | 250 | 60 | 16.7 | 29.2 | 47.9 | | | | 11 | 0.55 | 110 |
| FPS30AQ(Z)V | | 190 | | | | | 20.6 | 33.1 | 59 | 8 | | 116 |
| FPS40AM(Z)V | 1102 | 240 | 60 | 24 | 40.7 | 68.8 | | | | 23 | 0.32x2 | 150 |
| FPS40AQ(Z)V | | 180 | | | | | 31.5 | 46.6 | 90.3 | 48 | | 157 |
| FPS50AM(Z)V | 1377 | 290 | 60 | 31.5 | 52.1 | 90.3 | | | | 42 | 0.45x2 | 168 |
| FPS50AQ(Z)V | | 230 | | | | | 40.6 | 58.8 | 116.5 | 86 | | 177 |
| FPS60AM(Z)V | 1652 | 290 | 59 | 39.2 | 63.6 | 112.3 | | | | 67 | 0.55x2 | 185 |
| FPS60AQ(Z)V | | 230 | | | | | 47.4 | 70 | 136 | 50 | | 196 |
| FPS80AM(Z)V | 2203 | 310 | 59 | 50.5 | 83 | 144.7 | | | | 63 | 0.8x2 | 257 |
| FPS80AQ(Z)V | | 250 | | | | | 61.5 | 92.3 | 176.3 | 48 | | 271 |
| FPS100AM(Z)V | 2754 | 340 | 62 | 64.2 | 104.5 | 183.9 | | | | 81 | 1.1x2 | 305 |
| FPS100AQ(Z)V | | 280 | | | | | 77.9 | 115.8 | 223.5 | 58 | | 322 |
| FPS120AM(Z)V | 3305 | 310 | 63 | 77.2 | 125.7 | 221.1 | | | | 86 | 1.1x2 | 343 |
| FPS120AQ(Z)V | | 240 | | | | | 93.5 | 139.2 | 268.3 | 61 | | 363 |
| FPS150AM(Z)V | 4131 | 320 | 64 | 96.9 | 157.3 | 275.5 | | | | 92 | 1.5x2 | 399 |
| FPS150AQ(Z)V | | 250 | | | | | 117.4 | 173.9 | 337 | 66 | | 426 |

## Cooling performance data of fresh air type

| Entering air temp. | | | | 33 °C DB 28 °C WB | | 33 °C DB 28 °C WB | |
|---|---|---|---|---|---|---|---|
| Entering water temp. | | | | 7 ℃ DB | | 7 ℃ DB | |
| Model | Air flow(L/S) | Water flow(l/min) | Hydraulic pressure Loss(kPa) | TH(kw) | SH(kw) | TH(kw) | SH(kw) |
| FPS15AN(Z)V FPS15AP(Z)V | 413 | 13.0 | 5 | 12.3 | 5.2 | 12.3 | 6.1 |
| | | 32.4 | 20 | 18.6 | 7.2 | 18.6 | 8.1 |
| | | 48.7 | 41 | 20.9 | 8.1 | 20.8 | 8.9 |
| | | 63.1 | 64 | 22.0 | 8.5 | 22.0 | 9.3 |
| | | 64.8 | 68 | 22.1 | 8.5 | 22.1 | 9.4 |
| FPS20AN(Z)V FPS20AP(Z)V | 551 | 26.1 | 4 | 18.5 | 7.6 | 18.4 | 8.7 |
| | | 64.9 | 16 | 26.0 | 10.1 | 26.0 | 11.2 |
| | | 78.0 | 21 | 27.3 | 10.5 | 27.2 | 11.7 |
| | | 97.3 | 32 | 28.7 | 11.1 | 28.6 | 12.2 |
| | | 129.7 | 53 | 30.2 | 11.6 | 30.1 | 12.8 |
| FPS25AN(Z)V FPS25AP(Z)V | 689 | 26.1 | 4 | 21.7 | 9.0 | 21.7 | 10.5 |
| | | 64.9 | 17 | 31.7 | 12.3 | 31.7 | 13.7 |
| | | 97.3 | 34 | 35.2 | 13.6 | 35.1 | 15.0 |
| | | 101.8 | 37 | 35.6 | 13.7 | 35.5 | 15.1 |
| | | 129.7 | 57 | 37.2 | 14.3 | 37.2 | 15.8 |
| FPS30AN(Z)V FPS30AP(Z)V | 826 | 26.0 | 4 | 24.5 | 10.4 | 24.7 | 12.1 |
| | | 64.9 | 18 | 37.2 | 14.4 | 37.1 | 16.1 |
| | | 97.3 | 36 | 41.6 | 16.0 | 41.5 | 17.7 |
| | | 125.5 | 57 | 44.0 | 16.9 | 43.8 | 18.6 |
| | | 129.7 | 61 | 44.2 | 17.0 | 44.1 | 18.7 |
| FPS40AN(Z)V FPS40AP(Z)V | 1102 | 48.7 | 3 | 36.3 | 14.9 | 36.2 | 17.2 |
| | | 121.7 | 15 | 51.7 | 20.0 | 51.6 | 22.3 |
| | | 158.0 | 23 | 55.2 | 21.3 | 55.1 | 23.6 |
| | | 182.5 | 29 | 57.0 | 21.9 | 56.9 | 24.2 |
| | | 243.3 | 49 | 60.0 | 23.1 | 59.9 | 25.4 |
| FPS50AN(Z)V FPS50AP(Z)V | 1377 | 48.7 | 4 | 42.6 | 17.8 | 42.4 | 2.6 |
| | | 121.7 | 16 | 63.1 | 24.5 | 62.9 | 27.3 |
| | | 182.5 | 32 | 70.1 | 27.0 | 70.0 | 29.9 |
| | | 205.5 | 39 | 71.9 | 27.7 | 71.7 | 30.5 |
| | | 243.3 | 53 | 74.3 | 28.6 | 74.11 | 31.4 |
| FPS60AN(Z)V FPS60AP(Z)V | 1652 | 48.7 | 4 | 47.9 | 20.4 | 48.0 | 23.8 |
| | | 121.7 | 17 | 73.7 | 28.6 | 73.6 | 32.1 |
| | | 182.5 | 34 | 82.8 | 31.9 | 82.6 | 35.3 |
| | | 243.3 | 57 | 88.0 | 33.9 | 87.7 | 37.2 |
| FPS80AN(Z)V FPS80AP(Z)V | 2203 | 64.9 | 4 | 62.1 | 26.5 | 62.0 | 30.9 |
| | | 162.2 | 17 | 95.3 | 37.1 | 95.1 | 41.6 |
| | | 243.4 | 33 | 107.2 | 41.3 | 107.1 | 45.9 |
| | | 324.4 | 56 | 114.2 | 44.0 | 114.0 | 48.5 |
| FPS100AN(Z)V FPS100AP(Z)V | 2754 | 74.7 | 4 | 75.1 | 32.4 | 74.9 | 37.7 |
| | | 186.6 | 17 | 117.7 | 45.8 | 117.3 | 51.4 |
| | | 279.9 | 35 | 132.9 | 51.3 | 132.7 | 56.9 |
| | | 373.1 | 58 | 141.9 | 54.6 | 141.5 | 60.2 |
| FPS120AN(Z)V FPS120AP(Z)V | 3305 | 87.7 | 4 | 89.3 | 38.7 | 89.2 | 44.9 |
| | | 219.0 | 17 | 140.5 | 54.9 | 140.2 | 61.5 |
| | | 328.5 | 35 | 159.0 | 61.3 | 158.7 | 68.1 |
| | | 437.7 | 59 | 169.8 | 65.4 | 169.5 | 72.1 |
| FPS150AN(Z)V FPS150AP(Z)V | 4131 | 107.1 | 4 | 110.6 | 48.1 | 110.2 | 55.7 |
| | | 267.7 | 18 | 174.8 | 68.2 | 174.4 | 76.6 |
| | | 401.5 | 36 | 198.3 | 76.5 | 197.7 | 84.8 |
| | | 534.9 | 60 | 211.9 | 81.6 | 211.5 | 90.0 |

## Heating performance data of fresh air type

| Entering air temp. | | | | -10 °C DB | | -5 °C DB | | 0℃ DB | | 5℃ DB | | 7℃ DB | |
|---|---|---|---|---|---|---|---|---|---|---|---|---|---|
| Entering water temp. | | | | 45 °C | 60 °C | 45 °C | 60 °C | 45 °C | 60 °C | 45 °C | 60 °C | 45 °C | 60 °C |
| Model | Air flow (L/S) | Water flow (l/min) | Hydr-aulic Pressure Loss(kPa) | Heating Capacity (kw) | Heating Capacity (kw) | Heating Capacity (kw) | Heating Capacity (kw) | Heating Capacity (kw) | Heating Capacity (kw) | Heating Capacity (kw) | Heating Capacity (kw) | Heating Capacity (kw) | Heating Capacity (kw) |
| FPS15AN(Z)V FPS15AP(Z)V | 413 | 13.0 | 5 | 17.7 | 22.5 | 16.1 | 20.9 | 14.3 | 19.2 | 12.7 | 17.6 | 12.2 | 17.0 |
| | | 32.4 | 20 | 21.7 | 27.7 | 19.7 | 25.7 | 17.7 | 23.7 | 15.7 | 21.7 | 14.9 | 20.9 |
| | | 48.7 | 41 | 22.7 | 29.0 | 20.6 | 26.9 | 18.5 | 24.7 | 16.4 | 22.6 | 15.7 | 21.9 |
| | | 63.1 | 64 | 23.2 | 29.5 | 21.1 | 27.4 | 19.0 | 25.3 | 16.9 | 23.2 | 16.1 | 22.3 |
| | | 64.8 | 68 | 23.2 | 29.7 | 21.1 | 27.6 | 19.0 | 25.3 | 16.9 | 23.2 | 16.1 | 22.3 |
| FPS20AN(Z)V FPS20AP(Z)V | 551 | 26.1 | 4 | 24.6 | 31.4 | 22.4 | 29.2 | 20.1 | 26.9 | 17.9 | 24.7 | 17.0 | 23.8 |
| | | 64.9 | 16 | 29.3 | 37.4 | 26.6 | 34.7 | 23.9 | 32.0 | 21.2 | 29.3 | 20.2 | 28.3 |
| | | 78.0 | 21 | 29.9 | 38.1 | 27.2 | 35.4 | 24.5 | 32.7 | 21.8 | 30.0 | 20.6 | 28.8 |
| | | 97.3 | 32 | 30.6 | 38.9 | 27.8 | 36.1 | 25.0 | 33.3 | 22.2 | 30.5 | 21.1 | 29.5 |
| | | 129.7 | 53 | 31.2 | 39.7 | 28.4 | 36.9 | 25.6 | 34.0 | 22.8 | 31.2 | 21.6 | 30.0 |
| FPS25AN(Z)V FPS25AP(Z)V | 689 | 26.1 | 4 | 30.0 | 38.1 | 27.3 | 35.4 | 24.5 | 32.8 | 21.8 | 30.1 | 20.8 | 29.0 |
| | | 64.9 | 17 | 36.4 | 46.2 | 33.1 | 42.9 | 29.7 | 39.6 | 26.4 | 36.3 | 25.1 | 35.1 |
| | | 97.3 | 34 | 38.0 | 48.2 | 34.5 | 44.8 | 31.1 | 41.4 | 27.6 | 38.0 | 26.2 | 36.6 |
| | | 101.8 | 37 | 38.2 | 48.5 | 34.7 | 45.0 | 31.2 | 41.5 | 27.7 | 38.0 | 26.3 | 36.8 |
| | | 129.7 | 57 | 38.8 | 49.4 | 35.3 | 45.9 | 31.7 | 42.3 | 28.2 | 38.8 | 26.9 | 37.3 |
| FPS30AN(Z)V FPS30AP(Z)V | 826 | 26.0 | 4 | 35.1 | 44.7 | 31.9 | 41.5 | 28.7 | 38.3 | 25.5 | 35.1 | 24.2 | 33.8 |
| | | 64.9 | 18 | 43.2 | 55.0 | 39.3 | 51.1 | 35.3 | 47.2 | 31.4 | 43.3 | 29.8 | 41.6 |
| | | 97.3 | 36 | 45.3 | 57.7 | 41.2 | 53.6 | 37.1 | 49.4 | 33.0 | 45.3 | 31.3 | 43.6 |
| | | 125.5 | 57 | 46.3 | 58.9 | 42.1 | 54.7 | 37.9 | 50.4 | 33.7 | 46.2 | 31.9 | 44.7 |
| | | 129.7 | 61 | 46.4 | 59.1 | 42.2 | 54.9 | 38.0 | 50.6 | 33.8 | 46.4 | 32.0 | 44.7 |
| FPS40AN(Z)V FPS40AP(Z)V | 1102 | 48.7 | 3 | 48.8 | 62.2 | 44.4 | 57.8 | 40.0 | 53.4 | 35.6 | 49.0 | 33.7 | 47.0 |
| | | 121.7 | 15 | 58.4 | 74.5 | 53.1 | 69.2 | 47.8 | 63.8 | 42.5 | 58.5 | 40.3 | 56.3 |
| | | 158.0 | 23 | 60.2 | 76.7 | 54.7 | 71.2 | 49.3 | 65.6 | 43.8 | 60.1 | 41.5 | 58.0 |
| | | 182.5 | 29 | 61.1 | 77.5 | 55.5 | 72.0 | 49.8 | 66.5 | 44.3 | 61.0 | 42.1 | 58.8 |
| | | 243.3 | 49 | 62.4 | 79.0 | 56.7 | 73.4 | 50.9 | 67.8 | 45.2 | 62.2 | 42.9 | 59.9 |
| FPS50AN(Z)V FPS50AP(Z)V | 1377 | 48.7 | 4 | 59.6 | 75.8 | 54.2 | 70.4 | 48.7 | 65.0 | 43.3 | 59.6 | 41.1 | 57.3 |
| | | 121.7 | 16 | 72.4 | 92.3 | 65.8 | 85.7 | 59.3 | 79.1 | 52.7 | 72.5 | 50.1 | 69.8 |
| | | 182.5 | 32 | 75.9 | 96.5 | 69.0 | 89.6 | 61.9 | 82.7 | 55.0 | 75.8 | 52.3 | 73.1 |
| | | 205.5 | 39 | 76.7 | 97.4 | 69.7 | 90.4 | 62.6 | 83.6 | 55.6 | 76.6 | 52.9 | 73.9 |
| | | 243.3 | 53 | 77.4 | 98.8 | 70.4 | 91.7 | 63.3 | 84.6 | 56.3 | 77.6 | 53.5 | 74.6 |
| FPS60AN(Z)V FPS60AP(Z)V | 1652 | 48.7 | 4 | 69.6 | 88.6 | 63.3 | 82.3 | 56.9 | 76.0 | 50.6 | 69.7 | 48.1 | 67.1 |
| | | 121.7 | 17 | 86.1 | 109.7 | 78.3 | 101.9 | 70.5 | 94.1 | 62.7 | 86.3 | 59.6 | 83.0 |
| | | 182.5 | 34 | 90.5 | 115.0 | 82.3 | 106.8 | 74.0 | 98.8 | 65.8 | 90.6 | 62.5 | 87.1 |
| | | 243.3 | 57 | 92.6 | 117.9 | 84.2 | 109.5 | 75.8 | 101.2 | 67.4 | 92.8 | 63.9 | 89.3 |
| FPS80AN(Z)V FPS80AP(Z)V | 2203 | 64.9 | 4 | 90.3 | 114.9 | 82.1 | 106.7 | 73.9 | 98.5 | 65.7 | 90.3 | 62.3 | 86.9 |
| | | 162.2 | 17 | 112.9 | 143.6 | 102.6 | 133.3 | 92.3 | 123.0 | 82.0 | 112.8 | 78.0 | 108.7 |
| | | 243.4 | 33 | 118.7 | 151.1 | 107.9 | 140.3 | 97.2 | 129.5 | 86.4 | 118.7 | 82.1 | 114.3 |
| | | 324.4 | 56 | 121.8 | 155.1 | 110.7 | 144.0 | 99.8 | 132.8 | 88.7 | 121.7 | 84.2 | 117.3 |
| FPS100AN(Z)V FPS100AP(Z)V | 2754 | 74.7 | 4 | 111.8 | 141.7 | 101.2 | 131.6 | 91.1 | 121.5 | 81.0 | 111.4 | 76.9 | 107.3 |
| | | 186.6 | 17 | 140.4 | 178.4 | 127.6 | 165.7 | 114.7 | 153.1 | 102.0 | 140.3 | 96.9 | 135.3 |
| | | 279.9 | 35 | 147.8 | 188.4 | 134.4 | 174.9 | 121.0 | 161.5 | 107.6 | 148.0 | 102.2 | 142.6 |
| | | 373.1 | 58 | 152.0 | 193.5 | 138.2 | 179.7 | 124.4 | 165.6 | 110.6 | 151.8 | 105.1 | 146.4 |
| FPS120AN(Z)V FPS120AP(Z)V | 3305 | 87.7 | 4 | 132.9 | 169.3 | 120.8 | 157.2 | 108.8 | 145.1 | 96.7 | 133.0 | 91.9 | 128.2 |
| | | 219.0 | 17 | 168.1 | 213.9 | 152.8 | 198.6 | 137.5 | 183.4 | 122.2 | 168.1 | 116.1 | 162.0 |
| | | 328.5 | 35 | 177.1 | 225.8 | 161.0 | 209.7 | 145.0 | 193.5 | 128.9 | 177.4 | 122.3 | 170.7 |
| | | 437.7 | 59 | 182.2 | 231.8 | 165.6 | 215.2 | 149.1 | 198.6 | 132.5 | 182.1 | 125.8 | 175.5 |
| FPS150AN(Z)V FPS150AP(Z)V | 4131 | 107.1 | 4 | 165.7 | 210.8 | 150.6 | 195.7 | 135.5 | 180.6 | 120.4 | 165.6 | 114.3 | 159.5 |
| | | 267.7 | 18 | 209.8 | 159.4 | 190.7 | 148.0 | 171.7 | 228.8 | 152.6 | 209.7 | 144.7 | 202.1 |
| | | 401.5 | 36 | 221.5 | 281.6 | 201.4 | 261.5 | 181.4 | 241.6 | 161.2 | 221.5 | 153.0 | 213.5 |
| | | 534.9 | 60 | 227.4 | 289.6 | 206.7 | 268.9 | 186.0 | 248.4 | 165.3 | 227.7 | 157.7 | 219.1 |

## Cooling performance data of fresh air type

| Entering air temp. | | | | 33 °C DB 28 °C WB | | 33 °C DB 28 °C WB | |
|---|---|---|---|---|---|---|---|
| Entering water temp. | | | | 7 ℃ DB | | 7 ℃ DB | |
| Model | Air flow(L/S) | Water flow(l/min) | Hydraulic pressure Loss(kPa) | TH(kw) | SH(kw) | TH(kw) | SH(kw) |
| FPS15AU(Z)V FPS15AX(Z)V | 413 | 26.1 | 4 | 18.4 | 7.2 | 18.3 | 8.2 |
| | | 64.9 | 17 | 24.5 | 9.4 | 24.4 | 10.4 |
| | | 71.4 | 20 | 25.0 | 9.6 | 24.9 | 10.6 |
| | | 97.3 | 35 | 26.3 | 10.1 | 26.3 | 11.1 |
| | | 129.7 | 58 | 27.3 | 10.6 | 27.2 | 11.5 |
| FPS20AU(Z)V FPS20AX(Z)V | 551 | 26.1 | 4 | 22.8 | 9.1 | 22.8 | 10.4 |
| | | 64.9 | 19 | 32.0 | 12.3 | 31.9 | 13.6 |
| | | 97.3 | 39 | 34.7 | 13.4 | 34.5 | 14.6 |
| | | 99.5 | 40 | 34.8 | 13.4 | 34.7 | 14.7 |
| | | 129.7 | 65 | 36.0 | 13.9 | 35.9 | 15.2 |
| FPS25AU(Z)V FPS25AX(Z)V | 689 | 26.1 | 5 | 26.4 | 10.7 | 26.4 | 12.3 |
| | | 64.9 | 21 | 38.8 | 15.0 | 38.7 | 16.5 |
| | | 97.3 | 42 | 42.6 | 16.4 | 42.4 | 18.0 |
| | | 127.0 | 68 | 44.4 | 17.2 | 44.3 | 18.7 |
| | | 129.7 | 71 | 44.5 | 17.2 | 44.4 | 18.8 |
| FPS30AU(Z)V FPS30AX(Z)V | 826 | 37.4 | 4 | 33.6 | 13.5 | 33.6 | 15.4 |
| | | 93.3 | 18 | 47.6 | 18.3 | 47.4 | 20.2 |
| | | 139.9 | 36 | 51.6 | 19.9 | 51.5 | 21.8 |
| | | 149.4 | 41 | 52.2 | 20.1 | 52.1 | 22.0 |
| | | 186.5 | 61 | 53.8 | 20.8 | 53.7 | 22.7 |
| FPS40AU(Z)V FPS40AX(Z)V | 1102 | 37.4 | 5 | 40.6 | 16.6 | 40.2 | 19.0 |
| | | 93.3 | 21 | 61.2 | 23.6 | 61.0 | 26.1 |
| | | 139.9 | 41 | 67.6 | 26.0 | 67.3 | 28.5 |
| | | 186.5 | 69 | 70.9 | 27.4 | 70.7 | 29.9 |
| FPS50AU(Z)V FPS50AX(Z)V | 1377 | 71.5 | 4 | 58.4 | 23.2 | 58.1 | 26.4 |
| | | 178.5 | 16 | 80.3 | 30.9 | 80.1 | 34.1 |
| | | 244.5 | 27 | 85.6 | 33.0 | 85.3 | 36.1 |
| | | 267.7 | 32 | 86.7 | 33.5 | 86.6 | 36.7 |
| | | 356.9 | 53 | 90.3 | 34.9 | 89.9 | 38.0 |
| FPS60AU(Z)V FPS60AX(Z)V | 1652 | 71.4 | 4 | 66.4 | 26.7 | 66.6 | 30.6 |
| | | 178.5 | 17 | 94.5 | 36.4 | 94.4 | 40.3 |
| | | 267.7 | 34 | 103.0 | 39.7 | 102.7 | 43.5 |
| | | 300.3 | 42 | 104.9 | 40.5 | 104.7 | 44.3 |
| | | 356.9 | 57 | 107.6 | 41.6 | 107.2 | 45.3 |
| FPS80AU(Z)V FPS80AX(Z)V | 2203 | 95.8 | 4 | 86.2 | 34.8 | 85.9 | 39.8 |
| | | 239.3 | 17 | 123.1 | 47.4 | 122.8 | 52.5 |
| | | 359.0 | 33 | 134.4 | 51.8 | 134.2 | 56.9 |
| | | 389.5 | 39 | 136.4 | 52.6 | 136.0 | 57.6 |
| | | 478.6 | 56 | 140.5 | 54.2 | 140.2 | 59.3 |
| FPS100AU(Z)V FPS100AX(Z)V | 2754 | 110.4 | 4 | 104.9 | 42.6 | 105.0 | 49.1 |
| | | 275.8 | 17 | 152.6 | 58.8 | 152.0 | 65.0 |
| | | 413.7 | 35 | 167.1 | 64.4 | 166.9 | 70.7 |
| | | 493.0 | 48 | 172.2 | 66.4 | 171.9 | 72.7 |
| | | 551.6 | 58 | 175.0 | 67.5 | 174.7 | 73.9 |
| FPS120AU(Z)V FPS120AX(Z)V | 3305 | 129.9 | 4 | 124.9 | 50.8 | 124.5 | 58.4 |
| | | 324.5 | 17 | 182.4 | 70.3 | 182.0 | 77.9 |
| | | 486.7 | 35 | 200.2 | 77.1 | 199.7 | 84.6 |
| | | 592.0 | 50 | 206.9 | 79.8 | 206.4 | 87.3 |
| | | 648.9 | 59 | 209.5 | 80.9 | 209.1 | 88.4 |
| FPS150AU(Z)V FPS150AX(Z)V | 4131 | 159.0 | 4 | 155.0 | 63.2 | 154.4 | 72.6 |
| | | 397.5 | 18 | 227.3 | 87.6 | 226.7 | 97.0 |
| | | 596.2 | 36 | 249.9 | 96.2 | 249.1 | 105.6 |
| | | 742.0 | 53 | 259.3 | 100.0 | 258.7 | 109.5 |
| | | 794.9 | 60 | 262.2 | 101.2 | 261.2 | 110.5 |



## Heating performance data of fresh air type

| Entering air temp. | | | | -10°C DB | | -5 °C DB | | 0℃ DB | | 5℃ DB | | 7℃ DB | |
|---|---|---|---|---|---|---|---|---|---|---|---|---|---|
| Entering water temp. | | | | 45°C | 60°C | 45°C | 60°C | 45°C | 60°C | 45°C | 60°C | 45°C | 60°C |
| Model | Air flow (L/S) | Water flow (l/min) | Hydr-aulic Pressure Loss(kPa) | Heating Capacity (kw) | Heating Capacity (kw) | Heating Capacity (kw) | Heating Capacity (kw) | Heating Capacity (kw) | Heating Capacity (kw) | Heating Capacity (kw) | Heating Capacity (kw) | Heating Capacity (kw) | Heating Capacity (kw) |
| FPS15AU(Z)V FPS15AX(Z)V | 413 | 26.1 | 4 | 22.1 | 28.2 | 20.1 | 26.2 | 18.1 | 24.2 | 16.1 | 22.2 | 15.2 | 21.3 |
| | | 64.9 | 17 | 24.5 | 31.3 | 22.3 | 29.1 | 20.1 | 26.9 | 17.9 | 24.7 | 17.0 | 23.8 |
| | | 71.4 | 20 | 24.8 | 31.6 | 22.5 | 29.3 | 20.2 | 27.1 | 18.0 | 24.8 | 17.1 | 23.8 |
| | | 97.3 | 35 | 25.2 | 31.7 | 22.9 | 29.4 | 20.5 | 27.4 | 18.2 | 25.1 | 17.4 | 24.2 |
| | | 129.7 | 58 | 25.4 | 32.3 | 23.1 | 30.0 | 20.8 | 27.7 | 18.5 | 25.4 | 17.5 | 24.5 |
| FPS20AU(Z)V FPS20AX(Z)V | 551 | 26.1 | 4 | 28.9 | 36.7 | 26.3 | 34.1 | 23.7 | 31.4 | 21.1 | 28.8 | 20.0 | 27.8 |
| | | 64.9 | 19 | 32.7 | 41.7 | 29.7 | 38.7 | 26.7 | 35.7 | 23.7 | 32.7 | 22.5 | 31.4 |
| | | 97.3 | 39 | 33.4 | 42.5 | 30.4 | 39.5 | 27.3 | 36.5 | 24.3 | 33.5 | 23.1 | 32.3 |
| | | 99.5 | 40 | 33.4 | 42.5 | 30.4 | 39.5 | 27.4 | 36.5 | 24.4 | 33.5 | 23.1 | 32.3 |
| | | 129.7 | 65 | 33.8 | 43.1 | 30.7 | 40.0 | 27.6 | 36.9 | 24.5 | 33.8 | 23.3 | 32.6 |
| FPS25AU(Z)V FPS25AX(Z)V | 689 | 26.1 | 5 | 35.2 | 44.8 | 32.0 | 41.6 | 28.8 | 38.5 | 25.6 | 35.3 | 24.3 | 33.9 |
| | | 64.9 | 21 | 40.6 | 51.7 | 36.9 | 48.0 | 33.3 | 44.3 | 29.6 | 40.6 | 28.0 | 39.1 |
| | | 97.3 | 42 | 41.7 | 53.1 | 37.9 | 49.3 | 34.1 | 45.5 | 30.3 | 41.7 | 28.7 | 40.1 |
| | | 127.0 | 68 | 42.0 | 53.6 | 38.2 | 49.8 | 34.5 | 46.0 | 30.7 | 42.2 | 29.1 | 40.6 |
| | | 129.7 | 71 | 42.1 | 53.6 | 38.3 | 49.8 | 34.5 | 46.0 | 30.7 | 42.2 | 29.2 | 40.6 |
| FPS30AU(Z)V FPS30AX(Z)V | 826 | 37.4 | 4 | 43.0 | 54.7 | 39.1 | 50.8 | 35.2 | 46.9 | 31.3 | 43.0 | 29.7 | 41.5 |
| | | 93.3 | 18 | 49.1 | 62.4 | 44.6 | 57.9 | 40.0 | 53.4 | 35.6 | 49.0 | 33.8 | 47.2 |
| | | 139.9 | 36 | 50.1 | 63.8 | 45.5 | 59.2 | 40.9 | 54.7 | 36.4 | 50.1 | 34.6 | 48.3 |
| | | 149.4 | 41 | 50.2 | 64.1 | 45.6 | 59.5 | 41.1 | 54.8 | 36.5 | 50.2 | 34.7 | 48.4 |
| | | 186.5 | 61 | 50.7 | 64.5 | 46.1 | 59.9 | 41.4 | 55.2 | 36.8 | 50.6 | 35.1 | 48.8 |
| FPS40AU(Z)V FPS40AX(Z)V | 1102 | 37.4 | 5 | 55.7 | 70.8 | 50.6 | 65.7 | 45.5 | 60.6 | 40.4 | 55.6 | 38.5 | 53.6 |
| | | 93.3 | 21 | 64.8 | 82.5 | 58.9 | 76.6 | 53.0 | 70.7 | 47.1 | 64.8 | 44.7 | 62.4 |
| | | 139.9 | 41 | 66.6 | 84.8 | 60.5 | 78.7 | 54.4 | 72.7 | 48.4 | 66.6 | 46.1 | 64.2 |
| | | 186.5 | 69 | 67.4 | 85.9 | 61.3 | 79.8 | 55.1 | 73.5 | 49.0 | 64.7 | 46.6 | 65.0 |
| FPS50AU(Z)V FPS50AX(Z)V | 1377 | 71.5 | 4 | 72.6 | 92.4 | 66.0 | 85.8 | 59.5 | 79.3 | 52.9 | 72.7 | 50.2 | 70.0 |
| | | 178.5 | 16 | 81.8 | 104.2 | 74.4 | 96.8 | 67.0 | 89.3 | 59.6 | 81.9 | 56.4 | 78.9 |
| | | 244.5 | 27 | 83.4 | 106.0 | 75.8 | 98.4 | 68.1 | 90.8 | 60.5 | 83.2 | 57.5 | 80.3 |
| | | 267.7 | 32 | 83.7 | 106.4 | 76.1 | 98.8 | 68.4 | 91.4 | 60.8 | 83.8 | 57.8 | 80.7 |
| | | 356.9 | 53 | 84.5 | 107.6 | 76.8 | 99.9 | 69.3 | 92.2 | 61.6 | 84.5 | 58.3 | 81.5 |
| FPS60AU(Z)V FPS60AX(Z)V | 1652 | 71.4 | 4 | 85.8 | 109.1 | 78. | 101.3 | 70.1 | 93.7 | 62.3 | 85.9 | 59.2 | 82.7 |
| | | 178.5 | 17 | 97.7 | 124.4 | 88.8 | 115.5 | 79.9 | 106.7 | 71.0 | 97.8 | 67.5 | 94.2 |
| | | 267.7 | 34 | 100.2 | 127.6 | 91.1 | 118.5 | 82.0 | 109.3 | 72.9 | 100.2 | 69.2 | 96.4 |
| | | 300.3 | 42 | 100.7 | 128.0 | 91.5 | 118.9 | 82.3 | 109.8 | 73.2 | 100.7 | 69.6 | 97.1 |
| | | 356.9 | 57 | 101.3 | 128.8 | 92.1 | 119.6 | 82.7 | 110.5 | 73.5 | 101.3 | 69.9 | 97.7 |
| FPS80AU(Z)V FPS80AX(Z)V | 2203 | 95.8 | 4 | 112.1 | 142.7 | 101.9 | 132.5 | 91.8 | 122.3 | 81.6 | 112.1 | 77.4 | 108.0 |
| | | 239.3 | 17 | 128.9 | 164.3 | 117.2 | 152.6 | 105.4 | 140.7 | 93.7 | 129.0 | 89.0 | 124.3 |
| | | 359.0 | 33 | 132.3 | 168.6 | 120.3 | 156.6 | 108.5 | 144.6 | 96.4 | 132.6 | 91.6 | 127.7 |
| | | 389.5 | 39 | 133.1 | 169.3 | 121.0 | 157.2 | 108.6 | 145.1 | 96.5 | 133.0 | 91.8 | 128.3 |
| | | 478.6 | 56 | 134.3 | 170.8 | 122.1 | 158.6 | 109.7 | 146.1 | 97.5 | 133.9 | 92.5 | 129.0 |
| FPS100AU(Z)V FPS100AX(Z)V | 2754 | 110.4 | 4 | 139.0 | 176.9 | 126.4 | 164.3 | 113.8 | 151.7 | 101.2 | 139.1 | 96.0 | 134.0 |
| | | 275.8 | 17 | 160.7 | 204.6 | 146.1 | 190.0 | 131.6 | 175.7 | 117.0 | 161.1 | 111.2 | 155.1 |
| | | 413.7 | 35 | 165.2 | 210.4 | 150.2 | 195.4 | 135.1 | 180.4 | 120.1 | 165.4 | 114.0 | 159.3 |
| | | 493.0 | 48 | 166.7 | 212.0 | 151.5 | 196.9 | 136.5 | 181.9 | 121.3 | 166.7 | 115.0 | 160.7 |
| | | 551.6 | 58 | 167.2 | 213.3 | 152.0 | 198.1 | 137.1 | 182.7 | 131.9 | 167.5 | 115.4 | 161.5 |
| FPS120AU(Z)V FPS120AX(Z)V | 3305 | 129.9 | 4 | 166.3 | 211.8 | 151.2 | 196.7 | 136.1 | 181.5 | 121.0 | 166.4 | 114.9 | 160.3 |
| | | 324.5 | 17 | 193.1 | 245.6 | 175.5 | 228.1 | 157.6 | 210.3 | 140.1 | 192.8 | 133.1 | 185.8 |
| | | 486.7 | 35 | 198.3 | 252.4 | 180.3 | 234.4 | 162.2 | 216.4 | 144.2 | 198.4 | 136.8 | 191.2 |
| | | 592.0 | 50 | 199.8 | 254.8 | 181.6 | 236.6 | 164.0 | 218.5 | 145.8 | 200.3 | 138.4 | 192.9 |
| | | 648.9 | 59 | 201.0 | 255.7 | 182.7 | 237.4 | 164.3 | 219.3 | 146.0 | 201.0 | 138.9 | 193.9 |
| FPS150AU(Z)V FPS150AX(Z)V | 4131 | 159.0 | 4 | 207.5 | 264.1 | 188.6 | 245.2 | 169.8 | 226.4 | 150.9 | 207.5 | 143.4 | 200.0 |
| | | 397.5 | 18 | 241.1 | 306.3 | 219.2 | 284.4 | 196.9 | 262.9 | 175.0 | 241.0 | 166.4 | 232.3 |
| | | 596.2 | 36 | 248.1 | 315.2 | 225.5 | 292.7 | 202.7 | 270.7 | 180.2 | 248.1 | 171.0 | 239.0 |
| | | 742.0 | 53 | 250.5 | 318.8 | 227.7 | 296.0 | 204.5 | 272.8 | 181.8 | 250.1 | 173.1 | 241.4 |
| | | 794.9 | 60 | 250.9 | 320.0 | 228.1 | 297.1 | 204.9 | 274.0 | 182.1 | 251.2 | 173.3 | 241.8 |

## Cooling performance data of return air type

| Entering air temp. | | | | 24°C DB 17.9°C WB | | 26°C DB 19.5°C WB | | 27°C DB 19.5°C WB | | 27°C DB 20.4°C WB | |
|---|---|---|---|---|---|---|---|---|---|---|---|
| Entering water temp. | | | | 7℃ DB | | 7℃ DB | | 7℃ DB | | 7℃ DB | |
| Model | Air flow(L/S) | Water flow(l/min) | Hydraulic pressure Loss(kPa) | TH(kw) | SH(kw) | TH(kw) | SH(kw) | TH(kw) | SH(kw) | TH(kw) | SH(kw) |
| FPS15AM(Z)V FPS15AT(Z)V | 413 | 13.0 | 5 | 5.5 | 4.4 | 6.3 | 4.8 | 6.4 | 5.2 | 6.9 | 5.0 |
| | | 24.1 | 12 | 7.1 | 5.2 | 8.3 | 5.7 | 8.4 | 6.1 | 9.1 | 5.9 |
| | | 32.4 | 20 | 7.8 | 5.5 | 9.2 | 6.1 | 9.2 | 6.5 | 10.1 | 6.4 |
| | | 48.7 | 41 | 8.7 | 5.9 | 10.2 | 6.5 | 10.2 | 6.9 | 11.2 | 6.8 |
| | | 64.8 | 68 | 9.2 | 6.1 | 10.9 | 6.8 | 10.8 | 7.2 | 11.9 | 7.1 |
| FPS20AM(Z)V FPS20AT(Z)V | 551 | 13.0 | 5 | 6.5 | 6.5 | 7.7 | 6.0 | 7.7 | 6.5 | 8.3 | 6.2 |
| | | 32.4 | 23 | 10.0 | 7.2 | 11.7 | 7.9 | 11.7 | 8.5 | 12.9 | 8.2 |
| | | 34.4 | 25 | 10.1 | 7.2 | 12.0 | 8.0 | 12.0 | 8.5 | 13.1 | 8.3 |
| | | 48.7 | 46 | 11.3 | 7.7 | 13.4 | 8.5 | 13.4 | 9.1 | 14.5 | 8.9 |
| | | 64.8 | 76 | 12.0 | 8.0 | 14.2 | 8.9 | 14.2 | 9.5 | 15.6 | 9.3 |
| FPS25AM(Z)V FPS25AT(Z)V | 689 | 13.0 | 6 | 7.7 | 7.7 | 8.7 | 7.2 | 9.0 | 9.0 | 9.4 | 7.4 |
| | | 32.4 | 25 | 12.1 | 8.7 | 14.1 | 9.6 | 14.2 | 10.2 | 15.2 | 9.9 |
| | | 45.3 | 45 | 13.4 | 9.4 | 15.8 | 10.3 | 15.8 | 11.0 | 17.2 | 10.7 |
| | | 48.7 | 51 | 13.6 | 9.5 | 16.2 | 10.4 | 16.2 | 11.2 | 17.6 | 10.9 |
| | | 64.8 | 84 | 14.7 | 9.9 | 17.3 | 10.9 | 17.3 | 11.7 | 19.0 | 11.4 |
| FPS30AM(Z)V FPS30AT(Z)V | 826 | 26.0 | 4 | 10.8 | 8.7 | 12.7 | 9.6 | 12.8 | 10.3 | 13.6 | 9.9 |
| | | 47.9 | 11 | 14.1 | 10.3 | 16.6 | 11.4 | 16.7 | 12.3 | 18.1 | 11.9 |
| | | 64.9 | 18 | 15.6 | 11.0 | 18.4 | 12.1 | 18.4 | 13.0 | 20.1 | 12.6 |
| | | 97.3 | 36 | 17.3 | 11.8 | 20.5 | 13.0 | 20.5 | 13.8 | 22.3 | 13.6 |
| | | 129.7 | 61 | 18.4 | 12.2 | 21.7 | 13.5 | 21.6 | 14.3 | 23.7 | 14.1 |
| FPS40AM(Z)V FPS40AT(Z)V | 1102 | 26.0 | 5 | 13.1 | 11.0 | 15.2 | 12.0 | 15.3 | 12.9 | 16.5 | 12.4 |
| | | 64.9 | 21 | 19.9 | 14.3 | 23.5 | 15.7 | 23.5 | 16.9 | 25.7 | 16.4 |
| | | 68.8 | 23 | 20.3 | 14.5 | 24.1 | 16.0 | 24.0 | 17.1 | 26.2 | 16.6 |
| | | 97.3 | 41 | 22.4 | 15.4 | 26.6 | 17.0 | 26.6 | 18.2 | 29.1 | 17.8 |
| | | 129.7 | 69 | 24.0 | 16.1 | 28.4 | 17.8 | 28.4 | 18.9 | 31.0 | 18.6 |
| FPS50AM(Z)V FPS50AT(Z)V | 1377 | 26.0 | 5 | 15.3 | 15.3 | 17.6 | 14.4 | 18.0 | 18.0 | 18.8 | 14.8 |
| | | 64.9 | 23 | 24.2 | 17.4 | 28.4 | 19.3 | 28.5 | 20.5 | 30.7 | 20.0 |
| | | 90.3 | 41 | 26.7 | 18.7 | 31.6 | 20.6 | 31.5 | 22.0 | 34.4 | 21.4 |
| | | 97.3 | 46 | 27.3 | 19.0 | 32.3 | 20.9 | 32.2 | 22.3 | 35.2 | 21.8 |
| | | 129.7 | 77 | 29.3 | 19.8 | 34.8 | 21.9 | 34.7 | 23.3 | 37.9 | 22.9 |
| FPS60AM(Z)V FPS60AT(Z)V | 1652 | 26.0 | 6 | 17.4 | 17.4 | 19.9 | 16.8 | 20.6 | 20.6 | 21.2 | 17.2 |
| | | 64.9 | 25 | 27.4 | 19.9 | 32.6 | 22.2 | 32.4 | 23.6 | 35.3 | 23.2 |
| | | 97.3 | 51 | 31.7 | 22.3 | 37.6 | 24.6 | 37.6 | 26.3 | 40.9 | 25.6 |
| | | 112.3 | 66 | 33.1 | 22.9 | 39.3 | 25.3 | 39.2 | 26.9 | 42.8 | 26.3 |
| | | 129.7 | 86 | 34.4 | 23.4 | 40.8 | 25.9 | 40.7 | 27.6 | 44.5 | 27.0 |
| FPS80AM(Z)V FPS80AT(Z)V | 2203 | 34.1 | 5 | 22.6 | 22.6 | 25.3 | 25.3 | 26.5 | 26.5 | 27.1 | 22.1 |
| | | 85.2 | 25 | 35.5 | 25.7 | 42.1 | 28.7 | 41.9 | 30.4 | 45.7 | 30.1 |
| | | 127.8 | 50 | 41.2 | 29.1 | 48.6 | 32.0 | 48.6 | 34.2 | 53.0 | 33.3 |
| | | 144.7 | 62 | 42.8 | 29.8 | 50.6 | 32.8 | 50.5 | 35.0 | 55.1 | 34.1 |
| | | 170.3 | 83 | 44.7 | 30.5 | 52.9 | 33.7 | 52.8 | 35.9 | 57.7 | 35.2 |
| FPS100AM(Z)V FPS100AT(Z)V | 2754 | 39.0 | 6 | 27.6 | 27.6 | 30.7 | 30.7 | 32.4 | 32.4 | 32.8 | 27.3 |
| | | 97.3 | 26 | 43.1 | 31.4 | 50.8 | 34.9 | 51.0 | 37.2 | 55.3 | 36.6 |
| | | 146.0 | 52 | 50.5 | 35.9 | 59.8 | 39.5 | 59.8 | 42.3 | 65.1 | 41.1 |
| | | 183.9 | 79 | 54.3 | 37.5 | 64.3 | 41.4 | 64.2 | 44.2 | 70.1 | 43.2 |
| | | 194.6 | 87 | 55.2 | 37.9 | 65.3 | 41.8 | 65.1 | 44.6 | 71.2 | 43.6 |
| FPS120AM(Z)V FPS120AT(Z)V | 3305 | 45.5 | 6 | 32.7 | 32.7 | 36.5 | 36.5 | 38.5 | 38.5 | 38.8 | 32.5 |
| | | 113.6 | 26 | 50.9 | 37.3 | 60.7 | 41.6 | 60.2 | 44.2 | 66.0 | 43.6 |
| | | 170.4 | 53 | 60.3 | 43.0 | 71.3 | 47.3 | 71.0 | 50.6 | 77.7 | 49.2 |
| | | 221.1 | 84 | 65.3 | 45.1 | 77.3 | 49.8 | 77.2 | 53.1 | 84.4 | 51.9 |
| | | 227.1 | 88 | 65.8 | 45.3 | 77.9 | 50.0 | 77.9 | 53.4 | 85.0 | 52.2 |
| FPS150AM(Z)V FPS150AT(Z)V | 4131 | 55.3 | 6 | 40.6 | 40.6 | 45.3 | 45.3 | 47.6 | 47.6 | 47.6 | 47.6 |
| | | 137.9 | 27 | 63.1 | 46.3 | 74.7 | 51.5 | 74.8 | 54.9 | 81.3 | 53.9 |
| | | 206.9 | 54 | 74.9 | 53.6 | 88.4 | 58.8 | 88.4 | 63.0 | 96.4 | 61.2 |
| | | 275.5 | 90 | 82.0 | 56.5 | 97.0 | 62.3 | 96.9 | 66.5 | 121.4 | 65.0 |



## Cooling performance data of return air type

| Entering air temp. | | | | 24°C DB 17.9°C WB | | 26°C DB 19.5°C WB | | 27°C DB 19.5°C WB | | 27°C DB 20.4°C WB | |
|---|---|---|---|---|---|---|---|---|---|---|---|
| Entering water temp. | | | | 7℃ DB | | 7℃ DB | | 7℃ DB | | 7℃ DB | |
| Model | Air flow(L/S) | Water flow(l/min) | Hydraulic pressure Loss(kPa) | TH(kw) | SH(kw) | TH(kw) | SH(kw) | TH(kw) | SH(kw) | TH(kw) | SH(kw) |
| FPS15AQ(Z)V FPS15AY(Z)V | 413 | 26.1 | 4 | 7.8 | 5.7 | 9.2 | 6.3 | 9.2 | 6.7 | 10.0 | 6.5 |
| | | 26.7 | 4 | 7.9 | 5.8 | 9.3 | 6.3 | 9.3 | 6.8 | 10.1 | 6.6 |
| | | 64.9 | 17 | 10.1 | 6.8 | 12.0 | 7.5 | 12.0 | 7.9 | 13.1 | 7.9 |
| | | 97.3 | 35 | 10.9 | 7.1 | 12.9 | 7.9 | 12.9 | 8.4 | 14.1 | 8.3 |
| | | 129.7 | 58 | 11.3 | 7.3 | 13.4 | 8.1 | 13.4 | 8.4 | 14.7 | 8.5 |
| FPS20AQ(Z)V FPS20AY(Z)V | 551 | 26.1 | 4 | 9.9 | 7.4 | 11.5 | 8.0 | 11.6 | 8.7 | 12.6 | 8.4 |
| | | 39.0 | 8 | 11.6 | 8.2 | 13.6 | 9.0 | 13.6 | 9.6 | 14.8 | 9.3 |
| | | 64.9 | 19 | 13.3 | 8.9 | 15.7 | 9.9 | 15.7 | 10.5 | 17.2 | 10.3 |
| | | 97.3 | 39 | 14.3 | 9.4 | 17.0 | 10.4 | 17.0 | 11.1 | 18.6 | 10.9 |
| | | 129.7 | 65 | 14.9 | 9.6 | 17.7 | 10.7 | 17.7 | 11.4 | 19.3 | 11.2 |
| FPS25AQ(Z)V FPS25AY(Z)V | 689 | 26.1 | 5 | 11.6 | 8.9 | 13.7 | 9.8 | 13.7 | 10.5 | 14.8 | 10.1 |
| | | 51.5 | 14 | 15.2 | 10.5 | 17.9 | 11.6 | 17.9 | 12.4 | 19.5 | 12.1 |
| | | 64.9 | 21 | 16.2 | 11.0 | 19.2 | 12.1 | 19.2 | 12.9 | 20.9 | 12.7 |
| | | 97.3 | 42 | 17.7 | 11.6 | 20.9 | 12.9 | 20.9 | 13.7 | 22.9 | 13.5 |
| | | 129.7 | 71 | 18.5 | 12.0 | 21.9 | 13.3 | 21.9 | 14.1 | 23.8 | 13.9 |
| FPS30AQ(Z)V FPS30AY(Z)V | 826 | 37.4 | 4 | 14.7 | 11.0 | 17.2 | 12.0 | 17.2 | 12.9 | 18.6 | 12.5 |
| | | 59.0 | 8 | 17.3 | 12.2 | 20.6 | 13.5 | 20.6 | 14.4 | 22.3 | 14.1 |
| | | 93.3 | 18 | 19.8 | 13.3 | 23.4 | 14.7 | 23.4 | 15.7 | 25.6 | 15.4 |
| | | 139.9 | 36 | 21.4 | 14.0 | 25.3 | 15.6 | 25.3 | 16.5 | 27.7 | 16.3 |
| | | 186.5 | 61 | 22.3 | 14.5 | 26.4 | 16.0 | 26.4 | 17.0 | 28.8 | 16.8 |
| FPS40AQ(Z)V FPS40AY(Z)V | 1102 | 26.1 | 6 | 16.4 | 13.3 | 18.7 | 14.3 | 19.2 | 15.7 | 20.0 | 14.7 |
| | | 64.9 | 27 | 24.3 | 16.7 | 28.7 | 18.5 | 28.7 | 19.7 | 31.2 | 19.3 |
| | | 90.3 | 47 | 26.6 | 17.9 | 31.5 | 19.8 | 31.5 | 21.0 | 34.3 | 20.6 |
| | | 97.3 | 54 | 27.1 | 18.1 | 32.1 | 20.0 | 32.1 | 21.3 | 35.0 | 20.9 |
| | | 129.7 | 89 | 28.7 | 18.8 | 34.0 | 20.8 | 34.0 | 22.1 | 37.1 | 21.8 |
| FPS50AQ(Z)V FPS50AY(Z)V | 1377 | 26.1 | 7 | 19.0 | 16.1 | 21.5 | 17.2 | 22.2 | 19.0 | 22.9 | 17.6 |
| | | 64.9 | 30 | 28.8 | 20.1 | 34.1 | 22.3 | 34.2 | 23.8 | 36.9 | 23.1 |
| | | 97.3 | 61 | 32.8 | 22.1 | 38.8 | 24.5 | 38.7 | 26.0 | 42.3 | 25.5 |
| | | 116.5 | 84 | 34.3 | 22.8 | 40.6 | 25.2 | 40.6 | 26.8 | 44.3 | 26.4 |
| | | 129.7 | 101 | 35.1 | 23.2 | 41.5 | 25.6 | 41.5 | 27.2 | 45.3 | 26.8 |
| FPS60AQ(Z)V FPS60AY(Z)V | 1652 | 37.4 | 6 | 24.2 | 19.9 | 27.6 | 21.3 | 28.3 | 23.4 | 29.5 | 21.9 |
| | | 93.3 | 25 | 36.0 | 24.9 | 42.4 | 27.5 | 42.6 | 29.3 | 46.3 | 28.8 |
| | | 136.0 | 49 | 40.2 | 26.9 | 47.6 | 29.8 | 47.4 | 31.6 | 51.9 | 31.1 |
| | | 139.9 | 51 | 40.5 | 27.0 | 47.8 | 29.9 | 47.8 | 31.8 | 52.2 | 31.2 |
| | | 186.5 | 86 | 42.9 | 28.1 | 50.8 | 31.2 | 50.7 | 33.1 | 55.5 | 32.6 |
| FPS80AQ(Z)V FPS80AY(Z)V | 2203 | 48.7 | 5 | 31.2 | 26.1 | 35.6 | 28.0 | 36.6 | 30.8 | 38.1 | 28.7 |
| | | 121.7 | 25 | 46.9 | 32.7 | 55.3 | 36.2 | 55.3 | 38.5 | 59.9 | 37.5 |
| | | 176.3 | 47 | 52.1 | 35.2 | 61.7 | 38.9 | 61.5 | 41.3 | 67.3 | 40.6 |
| | | 182.5 | 50 | 52.6 | 35.4 | 52.2 | 39.1 | 62.2 | 41.6 | 67.9 | 40.8 |
| | | 243.3 | 83 | 55.9 | 36.8 | 66.3 | 40.8 | 66.2 | 43.3 | 72.2 | 12.7 |
| FPS100AQ(Z)V FPS100AY(Z)V | 2754 | 56.8 | 6 | 38.1 | 32.3 | 43.5 | 34.6 | 44.4 | 38.0 | 46.2 | 35.4 |
| | | 142.0 | 26 | 57.8 | 40.5 | 68.1 | 44.7 | 68.3 | 47.7 | 74.1 | 46.6 |
| | | 212.9 | 52 | 65.1 | 43.9 | 77.0 | 48.5 | 77.0 | 51.7 | 84.1 | 50.7 |
| | | 223.5 | 57 | 65.9 | 44.3 | 78.0 | 49.0 | 77.9 | 52.1 | 85.1 | 51.1 |
| | | 283.9 | 87 | 69.4 | 45.8 | 82.3 | 50.8 | 82.1 | 53.9 | 89.7 | 53.1 |
| FPS120AQ(Z)V FPS120AY(Z)V | 3305 | 66.6 | 6 | 45.3 | 38.6 | 51.5 | 41.3 | 53.1 | 45.6 | 55.0 | 42.3 |
| | | 166.3 | 26 | 68.8 | 48.3 | 80.9 | 53.3 | 81.4 | 57.0 | 88.1 | 55.6 |
| | | 249.4 | 53 | 77.9 | 52.6 | 92.0 | 58.0 | 92.0 | 61.9 | 100.5 | 60.7 |
| | | 268.3 | 60 | 79.3 | 53.2 | 93.7 | 58.8 | 93.5 | 62.5 | 102.3 | 61.5 |
| | | 332.5 | 88 | 83.0 | 54.9 | 98.3 | 60.7 | 98.3 | 64.6 | 107.3 | 63.6 |
| FPS150AQ(Z)V FPS150AY(Z)V | 4131 | 81.2 | 6 | 56.0 | 48.0 | 63.8 | 51.5 | 66.0 | 56.8 | 68.3 | 52.8 |
| | | 202.8 | 27 | 85.6 | 60.1 | 100.6 | 66.3 | 100.9 | 70.8 | 109.2 | 69.0 |
| | | 304.2 | 54 | 97.0 | 65.6 | 114.5 | 72.4 | 114.5 | 77.1 | 125.1 | 75.6 |
| | | 337.0 | 65 | 99.4 | 66.7 | 117.4 | 73.6 | 117.4 | 78.4 | 128.4 | 77.0 |
| | | 405.6 | 90 | 103.5 | 68.4 | 122.8 | 75.9 | 122.4 | 80.5 | 133.8 | 79.3 |

## Heating performance data of return air type

| Entering air temp. | | | | 15℃ DB | | 18℃ DB | | 20℃ DB | | 21℃ DB | |
|---|---|---|---|---|---|---|---|---|---|---|---|
| Entering water temp. | | | | 45 °C | 60 °C | 45 °C | 60 °C | 45 °C | 60 °C | 45 °C | 60 °C |
| Model | Air flow(L/S) | Water flow(l/min) | Hydraulic pressure Loss(kPa) | Heating Capacity (kw) | Heating Capacity (kw) | Heating Capacity (kw) | Heating Capacity (kw) | Heating Capacity (kw) | Heating Capacity (kw) | Heating Capacity (kw) | Heating Capacity (kw) |
| FPS15AM(Z)V FPS15AT(Z)V | 413 | 13.0 | 5 | 9.5 | 14.3 | 8.6 | 13.3 | 7.9 | 12.7 | 7.6 | 12.4 |
| | | 24.1 | 12 | 11.2 | 16.8 | 10.1 | 15.7 | 9.3 | 14.9 | 8.9 | 14.5 |
| | | 32.4 | 20 | 11.8 | 17.7 | 10.6 | 16.5 | 9.9 | 15.8 | 9.5 | 15.4 |
| | | 48.7 | 41 | 12.3 | 18.5 | 11.1 | 17.3 | 10.3 | 16.5 | 9.9 | 16.1 |
| | | 64.8 | 68 | 12.7 | 19.0 | 11.4 | 17.7 | 10.5 | 16.8 | 10.1 | 16.4 |
| FPS20AM(Z)V FPS20AT(Z)V | 551 | 13.0 | 5 | 12.1 | 18.2 | 10.9 | 17.0 | 10.1 | 16.2 | 9.7 | 15.8 |
| | | 32.4 | 23 | 15.5 | 23.2 | 13.9 | 21.7 | 12.9 | 20.6 | 12.4 | 20.1 |
| | | 34.4 | 25 | 15.7 | 23.5 | 14.1 | 21.9 | 13.0 | 20.8 | 12.5 | 20.3 |
| | | 48.7 | 46 | 16.3 | 24.5 | 14.7 | 22.9 | 13.6 | 21.7 | 13.0 | 21.2 |
| | | 64.8 | 76 | 16.8 | 25.2 | 15.1 | 23.5 | 14.0 | 22.5 | 13.5 | 21.9 |
| FPS25AM(Z)V FPS25AT(Z)V | 689 | 13.0 | 6 | 14.5 | 21.7 | 13.0 | 20.3 | 12.1 | 19.3 | 11.6 | 18.8 |
| | | 32.4 | 25 | 19.0 | 28.5 | 17.1 | 26.6 | 15.8 | 25.2 | 15.1 | 24.6 |
| | | 45.3 | 45 | 20.0 | 30.0 | 18.0 | 28.0 | 16.6 | 26.6 | 15.9 | 25.9 |
| | | 48.7 | 51 | 20.2 | 30.3 | 18.2 | 28.3 | 16.9 | 27.0 | 16.2 | 26.3 |
| | | 64.8 | 84 | 20.9 | 31.3 | 18.8 | 29.2 | 17.4 | 27.8 | 16.7 | 27.1 |
| FPS30AM(Z)V FPS30AT(Z)V | 826 | 26.0 | 4 | 12.7 | 19.1 | 11.5 | 17.8 | 16.0 | 25.5 | 15.3 | 24.9 |
| | | 47.9 | 11 | 22.3 | 33.5 | 20.1 | 31.3 | 18.7 | 29.9 | 18.0 | 29.2 |
| | | 64.9 | 18 | 23.5 | 35.3 | 21.2 | 32.9 | 19.6 | 31.4 | 18.8 | 30.6 |
| | | 97.3 | 36 | 24.7 | 37.1 | 22.3 | 34.6 | 20.6 | 32.9 | 19.8 | 32.1 |
| | | 129.7 | 61 | 25.3 | 38.0 | 22.8 | 35.5 | 21.0 | 33.6 | 20.2 | 32.8 |
| FPS40AM(Z)V FPS40AT(Z)V | 1102 | 26.0 | 5 | 24.3 | 36.5 | 21.9 | 34.1 | 20.3 | 32.4 | 19.4 | 31.6 |
| | | 64.9 | 21 | 30.9 | 46.4 | 27.8 | 43.3 | 25.8 | 41.2 | 24.7 | 40.2 |
| | | 68.8 | 23 | 31.2 | 46.8 | 28.1 | 43.7 | 26.1 | 41.7 | 25.0 | 40.7 |
| | | 97.3 | 41 | 32.6 | 48.9 | 29.3 | 45.6 | 27.2 | 43.6 | 26.2 | 42.5 |
| | | 129.7 | 69 | 33.6 | 50.4 | 30.2 | 47.0 | 27.9 | 44.6 | 26.8 | 43.5 |
| FPS50AM(Z)V FPS50AT(Z)V | 1377 | 26.0 | 5 | 28.8 | 43.2 | 25.9 | 40.3 | 11.0 | 17.6 | 10.6 | 17.2 |
| | | 64.9 | 23 | 38.0 | 57.0 | 34.2 | 53.2 | 31.7 | 50.7 | 30.4 | 49.4 |
| | | 90.3 | 41 | 40.1 | 60.1 | 36.1 | 56.1 | 33.4 | 53.4 | 32.1 | 52.1 |
| | | 97.3 | 46 | 40.3 | 60.5 | 36.3 | 56.5 | 33.6 | 53.7 | 32.2 | 52.4 |
| | | 129.7 | 77 | 41.6 | 62.4 | 37.4 | 58.2 | 34.7 | 55.6 | 33.4 | 54.2 |
| FPS60AM(Z)V FPS60AT(Z)V | 1652 | 26.0 | 6 | 32.7 | 49.0 | 29.4 | 45.7 | 27.3 | 43.7 | 26.2 | 42.6 |
| | | 64.9 | 25 | 44.8 | 67.2 | 40.3 | 62.7 | 37.2 | 59.6 | 35.8 | 58.1 |
| | | 97.3 | 51 | 47.9 | 71.9 | 43.1 | 67.1 | 39.9 | 63.9 | 38.3 | 62.3 |
| | | 112.3 | 66 | 48.8 | 73.2 | 43.9 | 68.3 | 40.8 | 65.2 | 39.1 | 63.6 |
| | | 129.7 | 86 | 49.6 | 74.4 | 44.6 | 69.4 | 41.3 | 66.1 | 39.6 | 64.4 |
| FPS80AM(Z)V FPS80AT(Z)V | 2203 | 34.1 | 5 | 42.4 | 63.6 | 38.2 | 59.4 | 35.3 | 56.5 | 33.9 | 55.1 |
| | | 85.2 | 25 | 58.4 | 87.6 | 52.6 | 81.8 | 48.7 | 77.8 | 46.7 | 75.9 |
| | | 127.8 | 50 | 62.7 | 94.1 | 56.5 | 87.7 | 52.2 | 83.6 | 50.2 | 81.5 |
| | | 144.7 | 62 | 63.9 | 95.8 | 57.5 | 89.4 | 53.2 | 85.1 | 51.1 | 83.0 |
| | | 170.3 | 83 | 65.1 | 97.6 | 58.6 | 91.1 | 54.2 | 86.8 | 52.1 | 84.6 |
| FPS100AM(Z)V FPS100AT(Z)V | 2754 | 39.0 | 6 | 51.3 | 77.0 | 46.2 | 71.9 | 42.8 | 68.4 | 41.0 | 66.7 |
| | | 97.3 | 26 | 72.2 | 108.3 | 65.0 | 101.1 | 60.2 | 96.3 | 57.8 | 93.9 |
| | | 146.0 | 52 | 77.9 | 116.9 | 70.1 | 109.1 | 64.9 | 103.9 | 62.3 | 101.3 |
| | | 183.9 | 79 | 80.4 | 120.6 | 72.4 | 112.6 | 67.0 | 107.2 | 64.3 | 104.5 |
| | | 194.6 | 87 | 80.9 | 121.4 | 72.8 | 113.3 | 67.4 | 107.9 | 64.7 | 105.2 |
| FPS120AM(Z)V FPS120AT(Z)V | 3305 | 45.5 | 6 | 60.9 | 91.4 | 54.8 | 85.3 | 50.8 | 81.2 | 48.7 | 79.2 |
| | | 113.6 | 26 | 86.3 | 129.4 | 77.6 | 120.8 | 71.8 | 114.9 | 68.9 | 112.0 |
| | | 170.4 | 53 | 93.3 | 140.0 | 84.0 | 130.7 | 77.7 | 124.3 | 74.6 | 121.2 |
| | | 221.1 | 84 | 96.7 | 145.1 | 87.1 | 135.4 | 80.6 | 128.9 | 77.4 | 125.7 |
| | | 227.1 | 88 | 96.9 | 145.4 | 87.2 | 135.7 | 80.8 | 129.3 | 77.6 | 126.1 |
| FPS150AM(Z)V FPS150AT(Z)V | 4131 | 55.3 | 6 | 75.4 | 113.1 | 67.9 | 105.6 | 62.8 | 100.4 | 60.2 | 97.9 |
| | | 137.9 | 27 | 107.5 | 161.2 | 96.7 | 150.5 | 89.5 | 143.2 | 85.9 | 139.6 |
| | | 206.9 | 54 | 116.4 | 174.6 | 104.8 | 163.0 | 96.9 | 155.1 | 93.0 | 151.2 |
| | | 275.5 | 90 | 120.9 | 181.3 | 108.8 | 169.2 | 100.8 | 161.3 | 96.8 | 157.3 |



## Heating performance data of return air type

| Entering air temp. | | | | 15℃ DB | | 18℃ DB | | 20℃ DB | | 21℃ DB | |
|---|---|---|---|---|---|---|---|---|---|---|---|
| Entering water temp. | | | | 45 °C | 60 °C | 45 °C | 60 °C | 45 °C | 60 °C | 45 °C | 60 °C |
| Model | Air flow(L/S) | Water flow(l/min) | Hydraulic pressure Loss(kPa) | Heating Capacity (kw) | Heating Capacity (kw) | Heating Capacity (kw) | Heating Capacity (kw) | Heating Capacity (kw) | Heating Capacity (kw) | Heating Capacity (kw) | Heating Capacity (kw) |
| FPS15AQ(Z)V FPS15AY(Z)V | 413 | 26.1 | 4 | 12.4 | 18.1 | 10.9 | 16.9 | 10.1 | 16.1 | 9.7 | 15.7 |
| | | 26.7 | 4 | 12.4 | 18.2 | 10.9 | 16.9 | 10.1 | 16.1 | 9.7 | 15.7 |
| | | 64.9 | 17 | 13.8 | 20.1 | 12.1 | 18.8 | 11.2 | 17.9 | 10.8 | 17.5 |
| | | 97.3 | 35 | 14.0 | 20.5 | 12.3 | 19.2 | 11.4 | 18.3 | 11.0 | 17.8 |
| | | 129.7 | 58 | 14.3 | 20.8 | 12.5 | 19.5 | 11.6 | 18.6 | 11.1 | 18.1 |
| FPS20AQ(Z)V FPS20AY(Z)V | 551 | 26.1 | 4 | 16.1 | 23.7 | 14.1 | 22.0 | 13.1 | 20.9 | 12.6 | 20.4 |
| | | 39.0 | 8 | 17.3 | 25.4 | 15.2 | 23.6 | 14.0 | 22.5 | 13.5 | 21.9 |
| | | 64.9 | 19 | 18.3 | 26.7 | 16.1 | 25.0 | 14.9 | 23.8 | 14.3 | 23.2 |
| | | 97.3 | 39 | 18.7 | 27.3 | 16.4 | 25.5 | 15.2 | 24.3 | 14.6 | 23.7 |
| | | 129.7 | 65 | 18.9 | 27.6 | 16.5 | 25.7 | 15.3 | 24.5 | 14.7 | 23.9 |
| FPS25AQ(Z)V FPS25AY(Z)V | 689 | 26.1 | 5 | 19.7 | 19.2 | 17.3 | 26.9 | 16.0 | 25.6 | 15.4 | 25.0 |
| | | 51.5 | 14 | 22.2 | 32.5 | 19.5 | 30.4 | 18.1 | 28.9 | 17.4 | 28.2 |
| | | 64.9 | 21 | 22.6 | 33.3 | 19.9 | 30.9 | 18.4 | 29.4 | 17.7 | 28.7 |
| | | 97.3 | 42 | 23.3 | 34.1 | 20.4 | 31.8 | 18.9 | 30.3 | 18.2 | 29.5 |
| | | 129.7 | 71 | 23.5 | 34.5 | 20.6 | 32.1 | 19.1 | 30.6 | 18.3 | 29.8 |
| FPS30AQ(Z)V FPS30AY(Z)V | 826 | 37.4 | 4 | 24.1 | 35.2 | 21.1 | 32.8 | 19.6 | 31.3 | 18.8 | 30.5 |
| | | 59.0 | 8 | 26.1 | 38.1 | 22.9 | 35.6 | 21.2 | 33.9 | 20.4 | 33.1 |
| | | 93.3 | 18 | 27.4 | 40.0 | 24.0 | 37.4 | 22.2 | 35.6 | 21.4 | 34.7 |
| | | 139.9 | 36 | 28.0 | 40.9 | 24.6 | 38.2 | 22.8 | 36.4 | 21.8 | 35.5 |
| | | 186.5 | 61 | 28.3 | 41.4 | 24.9 | 38.7 | 23.0 | 36.8 | 22.1 | 35.9 |
| FPS40AQ(Z)V FPS40AY(Z)V | 1102 | 26.1 | 6 | 29.3 | 28.5 | 25.7 | 40.0 | 23.8 | 38.1 | 22.8 | 37.1 |
| | | 64.9 | 27 | 35.7 | 52.2 | 31.4 | 48.8 | 29.0 | 46.5 | 27.9 | 45.3 |
| | | 90.3 | 47 | 36.8 | 53.7 | 32.3 | 50.2 | 29.9 | 47.8 | 28.7 | 46.6 |
| | | 97.3 | 54 | 36.8 | 54.1 | 32.3 | 50.3 | 29.9 | 47.9 | 28.7 | 46.7 |
| | | 129.7 | 89 | 37.5 | 54.9 | 32.9 | 51.2 | 30.4 | 48.7 | 29.2 | 47.5 |
| FPS50AQ(Z)V FPS50AY(Z)V | 1377 | 26.1 | 7 | 34.4 | 33.4 | 30.2 | 47.0 | 27.9 | 44.7 | 26.8 | 43.6 |
| | | 64.9 | 30 | 44.0 | 64.3 | 38.6 | 60.1 | 35.8 | 57.2 | 34.3 | 55.8 |
| | | 97.3 | 61 | 45.8 | 67.0 | 40.2 | 62.6 | 37.2 | 59.6 | 35.8 | 58.1 |
| | | 116.5 | 84 | 46.4 | 67.9 | 40.7 | 63.3 | 37.7 | 60.3 | 36.2 | 58.8 |
| | | 129.7 | 101 | 46.6 | 68.3 | 40.9 | 63.6 | 37.9 | 60.6 | 36.4 | 59.1 |
| FPS60AQ(Z)V FPS60AY(Z)V | 1652 | 37.4 | 6 | 43.4 | 63.4 | 38.0 | 59.1 | 35.2 | 56.3 | 33.8 | 54.9 |
| | | 93.3 | 25 | 53.4 | 78.1 | 46.9 | 72.9 | 43.4 | 69.4 | 41.7 | 67.7 |
| | | 136.0 | 49 | 55.2 | 80.8 | 48.5 | 75.4 | 44.9 | 71.8 | 43.1 | 70.0 |
| | | 139.9 | 51 | 55.3 | 80.9 | 48.5 | 75.5 | 44.9 | 71.9 | 43.1 | 70.1 |
| | | 186.5 | 86 | 56.3 | 82.3 | 49.4 | 76.8 | 45.7 | 73.1 | 43.9 | 71.3 |
| FPS80AQ(Z)V FPS80AY(Z)V | 2203 | 48.7 | 5 | 56.3 | 82.3 | 49.4 | 76.8 | 45.7 | 73.1 | 43.9 | 71.3 |
| | | 121.7 | 25 | 70.2 | 102.6 | 61.6 | 95.8 | 57.1 | 91.3 | 54.8 | 89.0 |
| | | 176.3 | 47 | 72.8 | 106.6 | 63.9 | 99.4 | 59.2 | 94.7 | 56.8 | 92.3 |
| | | 182.5 | 50 | 73.0 | 106.8 | 64.0 | 99.6 | 59.3 | 94.9 | 56.9 | 92.5 |
| | | 243.3 | 83 | 74.3 | 108.6 | 65.2 | 101.4 | 60.4 | 96.6 | 58.0 | 94.2 |
| FPS100AQ(Z)V FPS100AY(Z)V | 2754 | 56.8 | 6 | 69.1 | 67.4 | 60.6 | 94.3 | 56.2 | 89.8 | 53.9 | 87.6 |
| | | 142.0 | 26 | 87.3 | 127.8 | 76.6 | 119.1 | 70.9 | 113.4 | 68.1 | 110.6 |
| | | 212.9 | 52 | 91.0 | 133.3 | 79.8 | 124.2 | 73.9 | 118.3 | 71.0 | 115.3 |
| | | 223.5 | 57 | 91.4 | 133.7 | 80.2 | 124.7 | 74.2 | 118.8 | 71.3 | 115.8 |
| | | 283.9 | 87 | 92.7 | 135.7 | 81.3 | 126.5 | 75.3 | 120.3 | 72.3 | 117.5 |
| FPS120AQ(Z)V FPS120AY(Z)V | 3305 | 66.6 | 6 | 82.3 | 120.4 | 72.2 | 112.3 | 66.9 | 107.0 | 64.2 | 104.3 |
| | | 166.3 | 26 | 104.7 | 153.1 | 91.9 | 142.9 | 85.1 | 136.1 | 81.7 | 132.7 |
| | | 249.4 | 53 | 109.2 | 159.6 | 95.8 | 149.0 | 88.7 | 141.9 | 85.2 | 138.4 |
| | | 268.3 | 60 | 109.8 | 160.4 | 96.4 | 149.9 | 89.2 | 142.8 | 85.7 | 139.2 |
| | | 332.5 | 88 | 111.4 | 162.6 | 97.8 | 152.1 | 90.5 | 144.8 | 86.9 | 141.2 |
| FPS150AQ(Z)V FPS150AY(Z)V | 4131 | 81.2 | 6 | 102.2 | 149.5 | 89.7 | 139.5 | 83.0 | 132.8 | 79.7 | 129.5 |
| | | 202.8 | 27 | 130.5 | 191.0 | 114.5 | 178.1 | 106.0 | 169.6 | 101.8 | 165.4 |
| | | 304.2 | 54 | 136.1 | 199.5 | 119.4 | 185.8 | 110.6 | 176.9 | 106.2 | 172.5 |
| | | 337.0 | 65 | 137.2 | 200.9 | 120.4 | 187.3 | 111.5 | 178.4 | 107.0 | 173.9 |
| | | 405.6 | 90 | 138.9 | 203.5 | 121.8 | 189.5 | 112.8 | 180.5 | 108.3 | 176.0 |

# ESP-AIRFLOW DIAGRAM

FPS15A

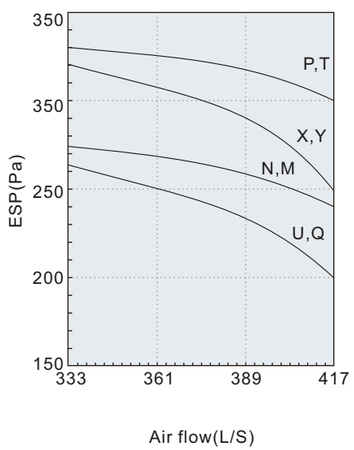


FPS20A

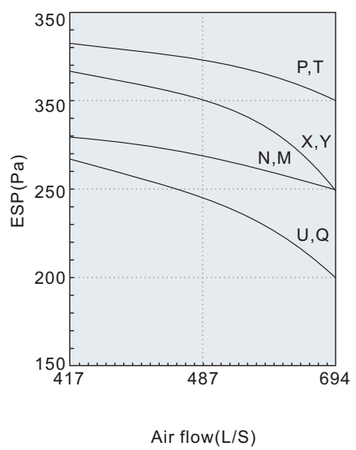


FPS25A

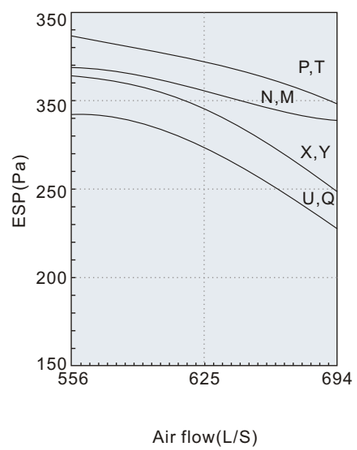


FPS30A

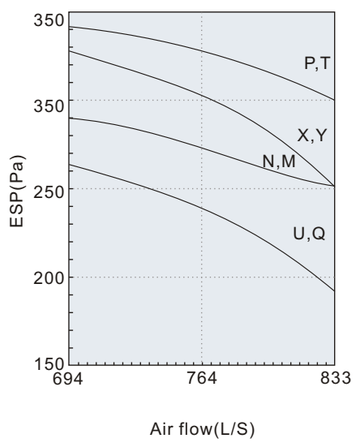


FPS40A

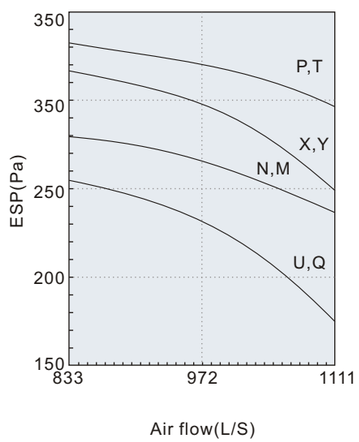


FPS50A

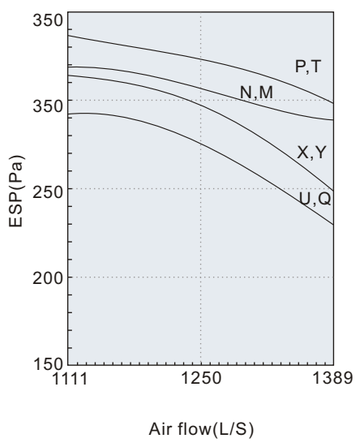


FPS60A

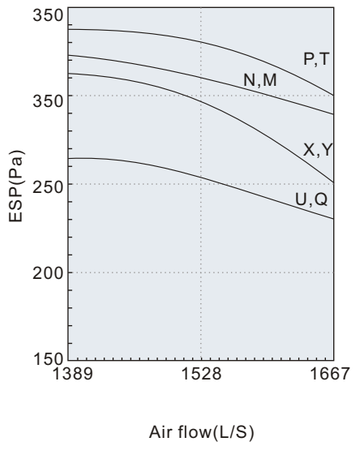


FPS80A

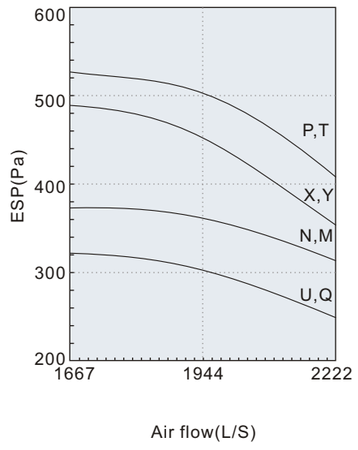


FPS100A

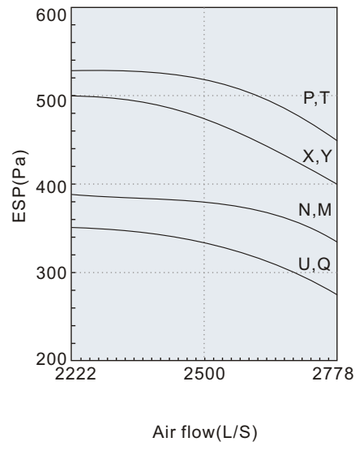


FPS120A

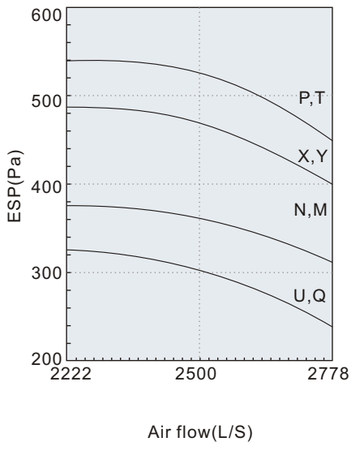


FPS150A

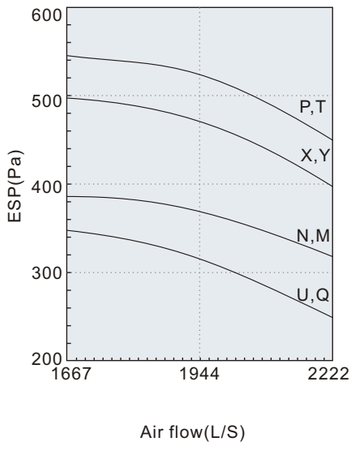

# DRAWINGS&DIMENSION

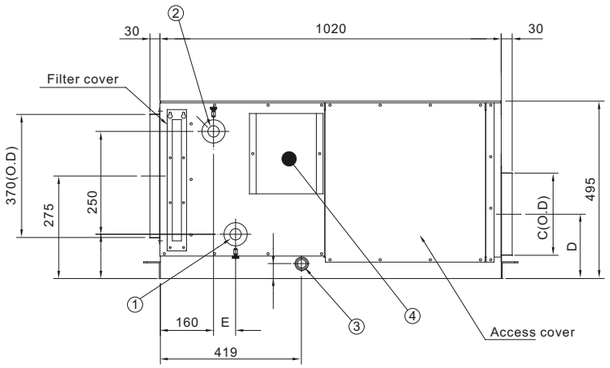


| NO | NAME | NOTE |
|---|---|---|
| 1 | water inlet | R outside thread |
| 2 | water outlet | R outside thread |
| 3 | drain conn. | 1" outside thread |
| 4 | junction box | |
| 5 | end panel | 4- ⌀14hole |

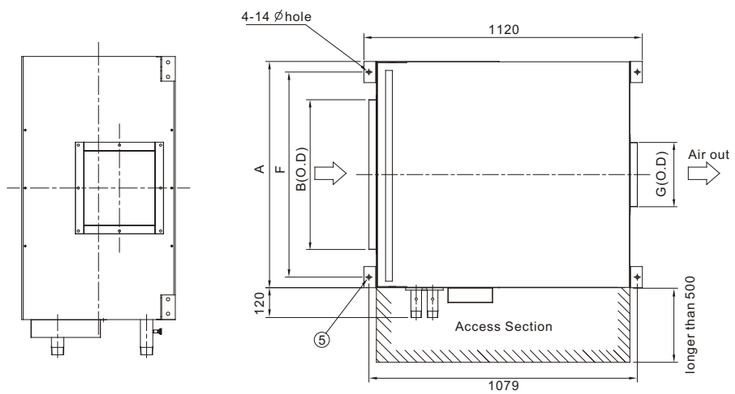


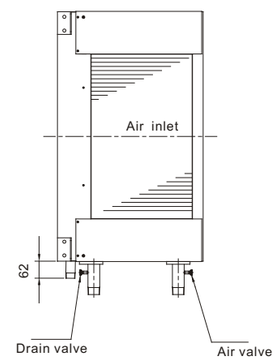


| | Units | Cooling condition | A | B | C | D | E | F | G | R |
|---|---|---|---|---|---|---|---|---|---|---|
| standard units | FPS15A_(Z)V | Type N,U Fresh air | 760 | 512 | 190 | 157.5 | 66 | 673 | 272 | $1\frac{1}{4}$" |
| | | Type M,Q Return air | | | | | | | | $1\frac{1}{4}$" |
| | FPS20A_(Z)V | Type N,U Fresh air | 910 | 662 | 223 | 173.5 | 66 | 823 | 302 | $1\frac{1}{4}$" |
| | | Type M,Q Return air | | | | | | | | $1\frac{1}{4}$" |
| | FPS25A_(Z)V | Type N,U Fresh air | 1055 | 807 | 223 | 173.5 | 88 | 968 | 302 | $1\frac{1}{2}$" |
| | | Type M,Q Return air | | | | | | | | $1\frac{1}{4}$" |
| | FPS30A_(Z)V | Type N,U Fresh air | 1200 | 952 | 239 | 182 | 88 | 1113 | 302 | $1\frac{1}{2}$" |
| | | Type M,Q Return air | | | | | | | | $1\frac{1}{4}$" |
| high static pressure | FPS15A_(Z)V | Type P,X Fresh air | 760 | 512 | 223 | 173.5 | 66 | 673 | 302 | $1\frac{1}{4}$" |
| | | Type T,Y Return air | | | | | | | | $1\frac{1}{4}$" |
| | FPS20A_(Z)V | Type P,X Fresh air | 910 | 662 | 223 | 173.5 | 66 | 823 | 302 | $1\frac{1}{4}$" |
| | | Type T,Y Return air | | | | | | | | $1\frac{1}{4}$" |
| | FPS25A_(Z)V | Type P,X Fresh air | 1055 | 807 | 264 | 195 | 88 | 968 | 284 | $1\frac{1}{2}$" |
| | | Type T,Y Return air | | | | | | | | $1\frac{1}{4}$" |
| | FPS30A_(Z)V | Type P,X Fresh air | 1200 | 952 | 239 | 182.5 | 88 | 1113 | 326 | $1\frac{1}{2}$" |
| | | Type T,Y Return air | | | | | | | | $1\frac{1}{4}$" |

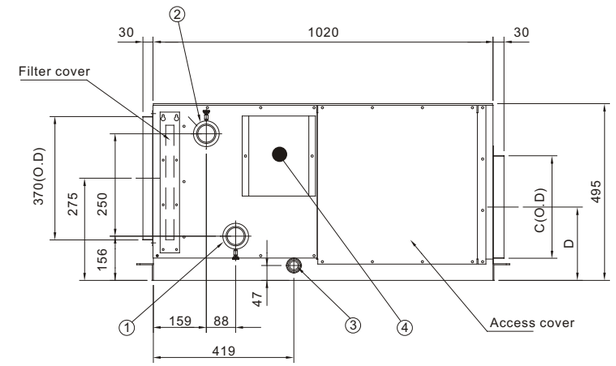


| NO | NAME | NOTE |
|---|---|---|
| 1 | water inlet | R outside thread |
| 2 | water outlet | R outside thread |
| 3 | drain conn. | 1" outside thread |
| 4 | junction box | |
| 5 | end panel | 4- ⌀14hole |

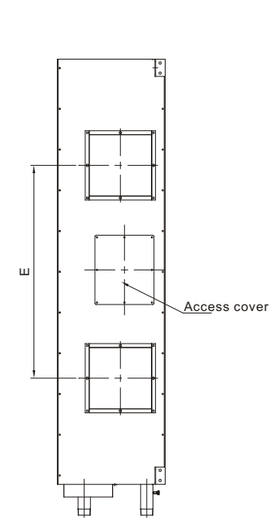


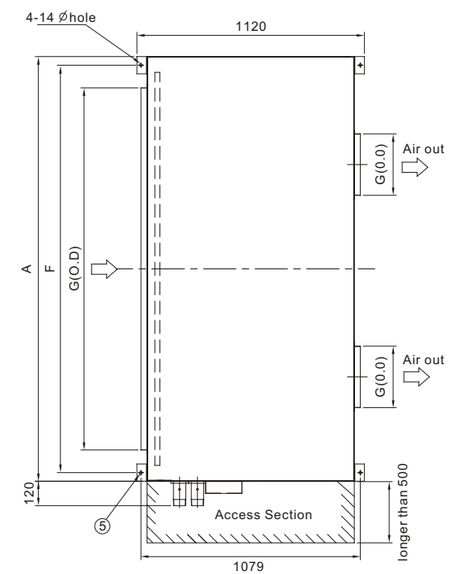


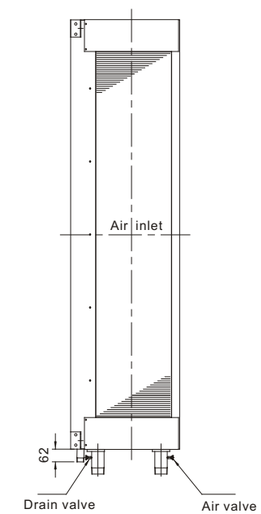


| | Units | Cooling condition | A | B | C | D | E | F | G | R |
|---|---|---|---|---|---|---|---|---|---|---|
| standard units | FPS 40A_(Z)V | Type N,U Fresh air | 1500 | 1252 | 223 | 173 | 750 | 1413 | 302 | 2" |
| | | Type M,Q Return air | | | | | | | | $1\frac{1}{4}$" |
| | FPS 50A_(Z)V | Type N,U Fresh air | 1795 | 1547 | 223 | 173 | 860 | 1708 | 302 | 2" |
| | | Type M,Q Return air | | | | | | | | $1\frac{1}{4}$" |
| | FPS 60A_(Z)V | Type N,U Fresh air | 2090 | 1842 | 264 | 194.5 | 1045 | 2003 | 284 | 2" |
| | | Type M,Q Return air | | | | | | | | $1\frac{1}{2}$" |
| high static pressure | FPS 40A_(Z)V | Type P,X Fresh air | 1500 | 1252 | 223 | 173.5 | 750 | 1416 | 302 | 2" |
| | | Type T,Y Return air | | | | | | | | $1\frac{1}{4}$" |
| | FPS 50A_(Z)V | Type P,X Fresh air | 1795 | 1547 | 264 | 195 | 860 | 1708 | 284 | 2" |
| | | Type T,Y Return air | | | | | | | | $1\frac{1}{4}$" |
| | FPS 60A_(Z)V | Type P,X Fresh air | 2090 | 1842 | 239 | 182.5 | 1045 | 2003 | 326 | 2" |
| | | Type T,Y Return air | | | | | | | | $1\frac{1}{2}$" |

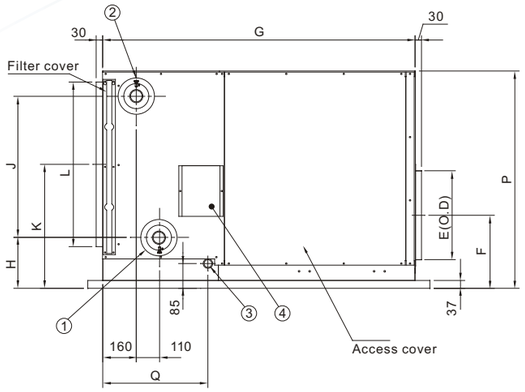


| NO | NAME | NOTE |
|---|---|---|
| 1 | water inlet | R outside thread |
| 2 | water outlet | R outside thread |
| 3 | drain conn. | 5/4outside thread |
| 4 | junction box | |
| 5 | end panel | 4- ⌀14hole |

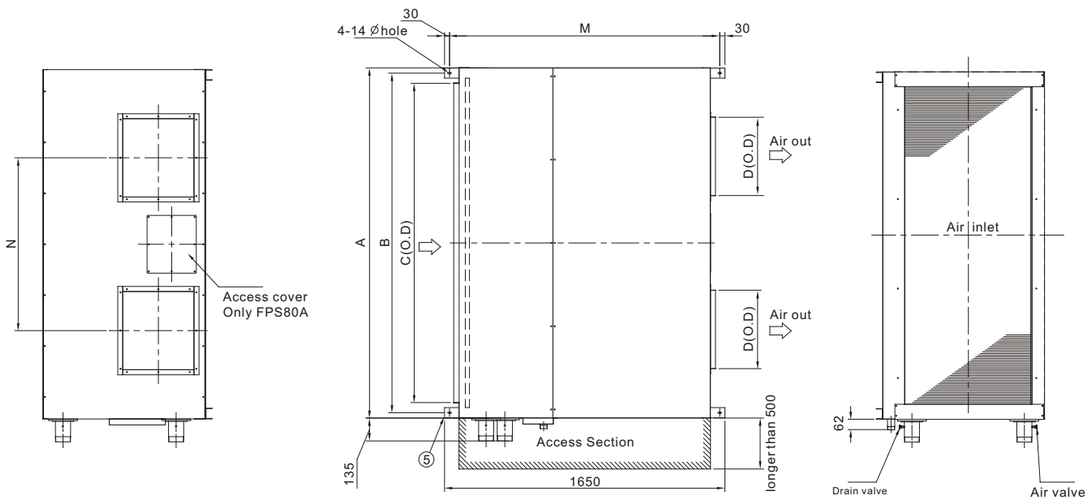


| | MODEL | Cooling condition | A | B | C | D | E | F | G | H | J | K | L | M | N | P | Q | R |
|---|---|---|---|---|---|---|---|---|---|---|---|---|---|---|---|---|---|---|
| standard units | FPS80A_(Z)V | N,U Fresh air | 1965 | 1900 | 1785 | 382 | 333 | 276 | 1240 | 207 | 353 | 390 | 446 | 1300 | 980 | 666 | 477 | $2\frac{1}{2}$" |
| | | M,Q Return air | | | | | | | | | | | | | | | | 2" |
| | FPS100A_(Z)V | N,U Fresh air | 2115 | 2050 | 1935 | 337 | 364 | 291.5 | 1290 | 202 | 422 | 429 | 524 | 1350 | 1060 | 743 | 499 | $2\frac{1}{2}$" |
| | | M,Q Return air | | | | | | | | | | | | | | | | 2" |
| | FPS120A_(Z)V | N,U Fresh air | 2165 | 2100 | 1985 | 337 | 364 | 291.5 | 1410 | 202 | 524 | 480 | 626 | 1470 | 1080 | 845 | 499 | $2\frac{1}{2}$" |
| | | M,Q Return air | | | | | | | | | | | | | | | | 2" |
| | FPS150A_(Z)V | N,U Fresh air | 2240 | 2175 | 2060 | 457 | 364 | 274.5 | 1480 | 210 | 667 | 556 | 778 | 1540 | 1120 | 997 | 499 | $2\frac{1}{2}$" |
| | | M,Q Return air | | | | | | | | | | | | | | | | 2" |
| high static pressure | FPS80A_(Z)V | P,X Fresh air | 1965 | 1900 | 1785 | 328 | 254 | 245 | 1240 | 207 | 353 | 390 | 446 | 1300 | 980 | 666 | 477 | $2\frac{1}{2}$" |
| | | T,Y Return air | | | | | | | | | | | | | | | | 2" |
| | FPS100A_(Z)V | P,X Fresh air | 2115 | 2050 | 1935 | 408 | 340 | 288 | 1290 | 202 | 422 | 429 | 524 | 1350 | 1060 | 743 | 499 | $2\frac{1}{2}$" |
| | | T,Y Return air | | | | | | | | | | | | | | | | 2" |
| | FPS120A_(Z)V | P,X Fresh air | 2165 | 2100 | 1985 | 408 | 340 | 288 | 1410 | 202 | 524 | 480 | 626 | 1470 | 1080 | 845 | 499 | $2\frac{1}{2}$" |
| | | T,Y Return air | | | | | | | | | | | | | | | | 2" |
| | FPS150A_(Z)V | P,X Fresh air | 2240 | 2175 | 2060 | 422 | 469 | 348.5 | 1480 | 210 | 667 | 556 | 778 | 1540 | 1120 | 997 | 499 | $2\frac{1}{2}$" |
| | | T,Y Return air | | | | | | | | | | | | | | | | 2" |



# WIRING DIAGRAM

## FPS15-30A(Z)V

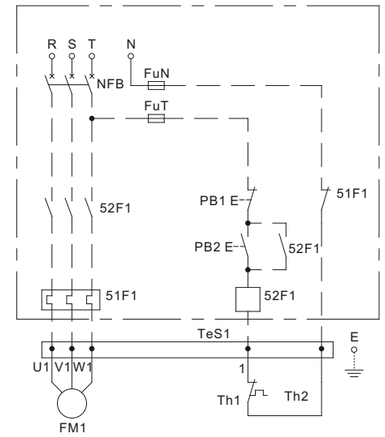


| Tag | Component |
|---|---|
| FM 1 | Motor |
| TH 1 | Overheat protction |
| TeS1 | Terminal block |
| Field manual configuration | |
| NFB | Air pressure switch |
| FuN,T | Fuse |
| 52F1 | Contactor |
| 51F1 | Overcurrent relay |
| PB1 | Switch (stop) |
| PB2 | Switch (start) |

Note)-Field wiring
(Customers' own wire)

## FPS40-150A(Z)V

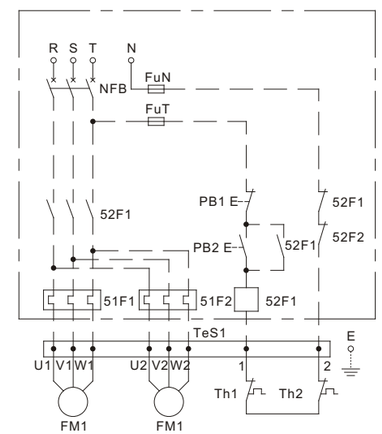


| Tag | Component |
|---|---|
| FM 1,2 | Motor |
| TH 1,2 | Overheat protction |
| TeS1 | Terminal block |
| Field manual configuration | |
| NFB | Air pressure switch |
| FuN,T | Fuse |
| 52F1 | Contactor |
| 51F1,2 | Overcurrent relay |
| PB1 | Switch (stop) |
| PB2 | Switch (start) |

Note)-Field wiring
(Customers' own wire)

# INSTALLATION,OPERATION&MAINTENANCE

1. Unit must be installed on level surface to prevent water flooding out of drain pan.
2. For service access, allow minimum 500mm clearance from the access door and piping.
3. Make certain the support structure is strong enough to support the unit weight. The weight of connected duct and piping should not be borne by the unit.
4. A trap must be fitted on the condensate drain. The height of the water seal should be equal to two times the static pressure to ensure drain of free flow. A drain line pitch with minimum slope of 0.005 is recommended.
5. Install valves to the water Inlet and Outlet connections to regulate the water flow. Water pipes should be insulated.
6. The voltage and HZ of the power supply should match those indicated on the name plate.
7. The unit should be grounded properly in accordance with local regulations and check the electrical insulation before turning power on
8. Check that the fan impeller rotates freely and in the correct direction.
9. Open the manual air vent to make sure that there is no air in the coil.
10. The velocity of chilled water and hot water flow should be adjusted to range of 05-1 8mrs.
11. For units that have two or more fans, the fans must operate at the same time.
12. Inspect the unit periodically, inspect the air filter monthly, clean or replace clogged filter element.
13. Inspect the unit periodically, inspect the air filter monthly, clean or replace clogged filter element. If the unit is not running for a long period, keep the water circuit full of water to prevent corrosion of the pipe system. To avoid breaks caused by ice, please empty the water circuit when the room temperature goes down to 0°C.
14. Clean and tighten all fan and motor electrical connections.
15. A complete and thorough maintenance is required when the unit has been operating for over two years. Inspect the coil fins for excessive dirt or damage, remove dirt and straighten fins. Check all pips are secure.