Packaged Air Handling Unit
LSFP Series
LSFP135

Model Number Configuration

LSFP135-WI-4+1 :	4 + 1 Row: Horizontal Model: Horizontal air discharge
LSFP135-WII-4+1:	4 + 1 Row: Horizontal Model: Vertical air discharge
LSFP135-AWI-4+1:	4 + 1 Row: Horizontal Model: Horizontal air discharge with fan turn 180°
LSFP135-AWII-4+1:	4 + 1 Row: Horizontal Model: Vertical air discharge with fan turn 180°
LSFP135-WI-6+1 :	6 + 1 Row: Horizontal Model: Horizontal air discharge
LSFP135-WII-6+1:	6 + 1 Row: Horizontal Model: Vertical air discharge
LSFP135-AWI-6+1:	6 + 1 Row: Horizontal Model: Horizontal air discharge with fan turn 180°
LSFP135-AWII-6+1:	6 + 1 Row: Horizontal Model: Vertical air discharge with fan turn 180°

WI
Horizontal Model with
Horizontal air discharge

AWI
Horizontal Model with
fan turn 180° and
Horizontal air discharge

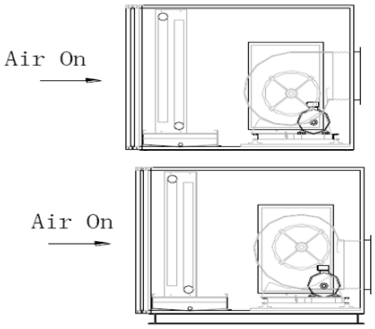

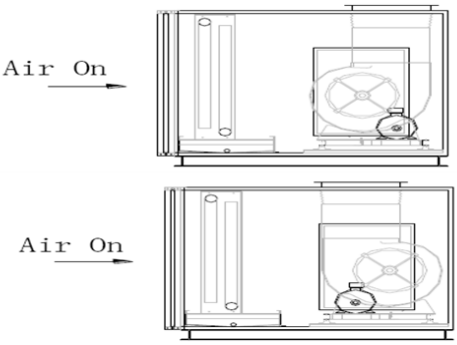

WII
Horizontal Model with
Vertical air discharge

AWII
Horizontal Model with
fan turn 180° and
Vertical air discharge

April 2010

Packaged Air Handling Unit *Horizontal Model LSFP135*

PERFORMANCE DATA

RETURN AIR

Model	Row	Air Flow	4 Rows Cooling				1 Row Heating			External Excess Pressure			Motor Power			Unit Weight	
			Total	Sensible	Water Flow	Water Resistance	Rated Heating	Water Flow	Water Resistance	I	II	III	I	II	III	Horizontal	Vertical
		l/s	kW	kW	l/s	kPa	kW	l/s	kPa	Pa	Pa	Pa	kW	kW	kW	kg	kg
LSFP135-4+1	4+1	3750	78.3	55.4	3.7	33.3	46.5	1.1	15.9	200	300	370	3	4	4	420	447
LSPF135-6+1	6+1	3750	99.6	67.1	4.8	34.7	46.5	1.1	15.9	200	300	370	4	4	5.5	450	492

Notes for Return Air:

1. Cooling: The water in/out temp.is 7°C/12°C; the air in temp. is 27°C DB / 19.5°C WB
2. Heating: The water in/out temp. is 60°C/50°C; the air in temp. is 21°C DB.
3. The motor power offered is the motor output power.
4. The above performance is for reference only. Different air and water conditions would lead to different cooling capacity.

SPECIFICATION

- **Coil:**
  LSFP010W-LSFP 120W : φ 9.52mm, copper tube, aluminium fins
  LSFP135W-LSFP 300W: φ 12.7mm, copper tube, aluminium fins
- **Fan and motor:**
  LSFP 010W-LSFP 025W: direct driven, forward curved centrifugal fan
  LSFP 030W-LSFP 300W: belt driven, forward curved centrifugal fan
- **Filter: 15mm panel filter**
- **Cabinet: 25mm thick double skinned panel**
- **Drip-tray: powder painting steel sheet**

Packaged Air Handling Unit -Horizontal Model LSFP135

Diagrams of: LSFP 135WI

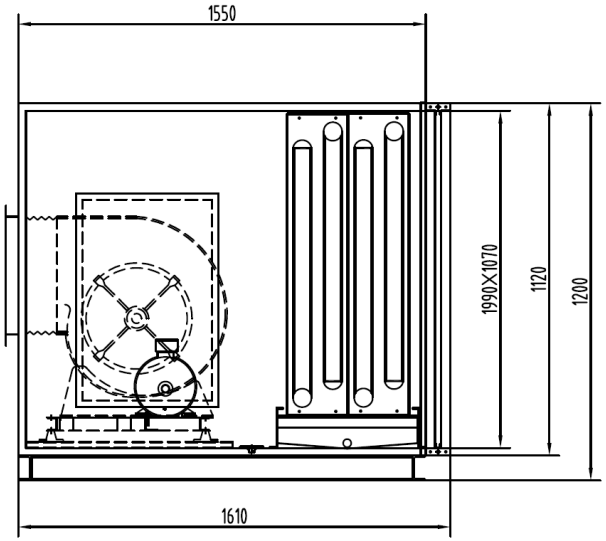

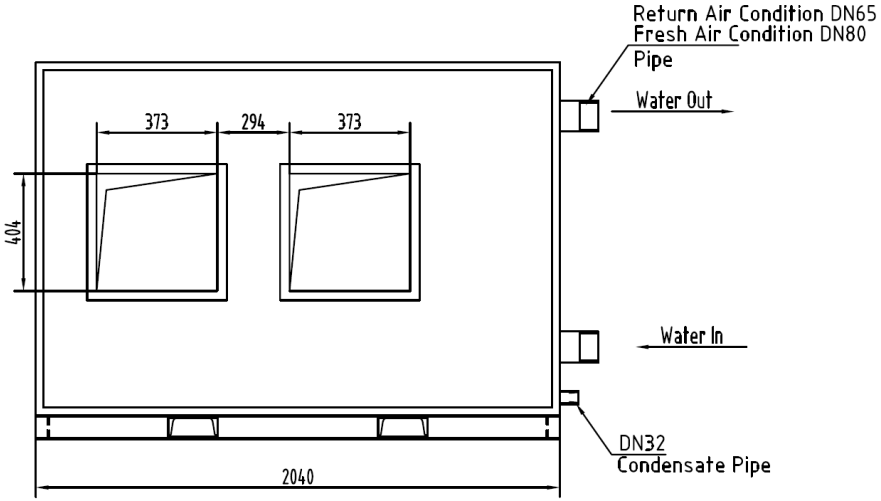

Air Flow l/s.	3750					
External Overbottom Pressure Pa	200		300		370	
Coil Rows:Cooling+Heating	4+1	6+1	4+1	6+1	4+1	6+1
Fan Model(Drive Type)	KDFTS15-11K(Belt Drive)					
Fan Speed r/min	775	811	860	891	915	940
Motor Pulley	SPA100-2	SPB112-2	SPB112-2	SPB112-2	SPB112-2	SPB125-2
Fan pulley	SPA180-2	SPB200-2	SPB190-2	SPB180-2	SPB170-2	SPB190-2
Belt Model/Quantity	SPA1232/2	SPB1250/2	SPB1250/2	SPB1250/2	SPB1250/2	SPB1250/2
Motor Power-Pole	3KW-4	4KW-4	4KW-4	4KW-4	4KW-4	5.5KW-4
A FLA	6.2A	8.1A	8.1A	8.1A	8.1A	10.8A
Voltage	415V/3Ph/50HZ					
Coil Diameter mm/Fins:Length×Width mm	9.52/1760×889					
Filter:Length×Width×Thickness mm/quantiay	498×529×15/8					

Note:The unit shown is of left hand type.

DRAWN BY: GUO JINGPENG	DATE: 10/11/2009	DUNNAIR		
APPROVED Q.A.: WU MEIJUN	APPROVED ENG.: ZHANG JINGFEI	TITLE:Water Cooled Fan Coil Unit LSFP TYPE		
MODEL: LSFP 135WI		DRAWING NO.: 01	ISSUE: 01	SHEET SIZE: A4

Packaged Air Handling Unit -Horizontal Model LSFP135

Diagrams of: LSFP 135WII

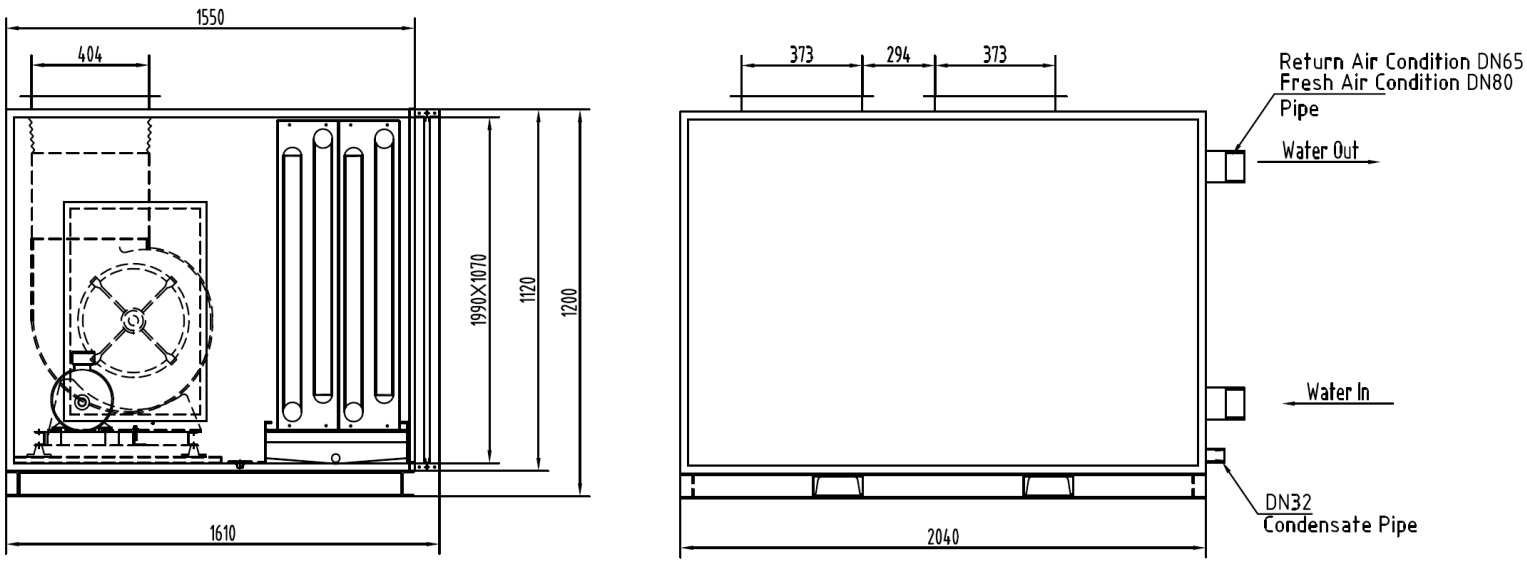

Air Flow l/s.	3750					
External Overbottom Pressure Pa	200		300		370	
Coil Rows:Cooling+Heating	4+1	6+1	4+1	6+1	4+1	6+1
Fan Model(Drive Type)	KDFTS15-11K(Belt Drive)					
Fan Speed r/min	775	811	860	891	915	940
Motor Pulley	SPA100-2	SPB112-2	SPB112-2	SPB112-2	SPB112-2	SPB125-2
Fan pulley	SPA180-2	SPB200-2	SPB190-2	SPB180-2	SPB170-2	SPB190-2
Belt Model/Quantity	SPA1232/2	SPB1250/2	SPB1250/2	SPB1250/2	SPB1250/2	SPB1250/2
Motor Power-Pole	3KW-4	4KW-4	4KW-4	4KW-4	4KW-4	5.5KW-4
A FLA	6.2A	8.1A	8.1A	8.1A	8.1A	10.8A
Voltage	415V/3Ph/50HZ					
Coil Diameter mm/Fins:Length×Width mm	9.52/1760×889					
Filter:Length×Width×Thickness mm/quantiay	498×529×15/8					

Note:The unit shown is of left hand type.

DRAWN BY: GUO JINGPENG	DATE: 10/11/2009	DUNNAIR		
APPROVED Q.A.: WU MEIJUN	APPROVED ENG.: ZHANG JINGFEI	TITLE:Water Cooled Fan Coil Unit LSFP TYPE		
MODEL: LSFP 135WII		DRAWING NO.: 01	ISSUE: 01	SHEET SIZE: A4

Packaged Air Handling Unit -Horizontal Model LSFP135

Diagrams of: LSFP 135AWI

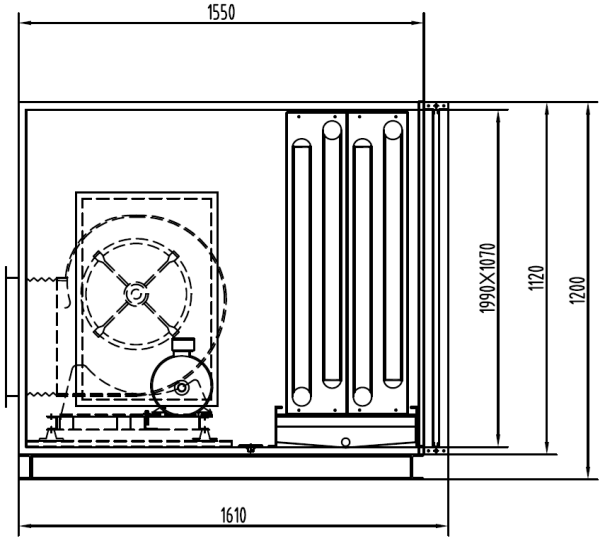

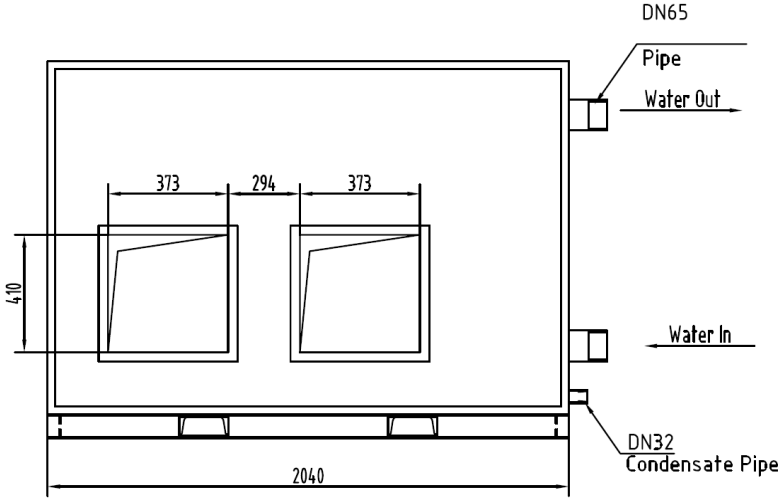

Air Flow l/s.	3750					
External Overbottom Pressure Pa	200		300		370	
Coil Rows:Cooling+Heating	4+1	6+1	4+1	6+1	4+1	6+1
Fan Model(Drive Type)	KDFTS15-11K(Belt Drive)					
Fan Speed r/min	775	811	860	891	915	940
Motor Pulley	SPA100-2	SPB112-2	SPB112-2	SPB112-2	SPB112-2	SPB125-2
Fan pulley	SPA180-2	SPB200-2	SPB190-2	SPB180-2	SPB170-2	SPB190-2
Belt Model/Quantity	SPA1232/2	SPB1250/2	SPB1250/2	SPB1250/2	SPB1250/2	SPB1250/2
Motor Power-Pole	3KW-4	4KW-4	4KW-4	4KW-4	4KW-4	5.5KW-4
A FLA	6.2A	8.1A	8.1A	8.1A	8.1A	10.8A
Voltage	415V/3Ph/50HZ					
Coil Diameter mm/Fins:Length×Width mm	Ø12.7/1760×889					
Filter:Length×Width×Thickness mm/quantiay	498×529×15/8					

Note:The unit shown is of left hand type.

DRAWN BY: GUO JINGPENG	DATE: 22/04/2010	DUNNAIR		
APPROVED Q.A.: WU MEIJUN	APPROVED ENG.: ZHANG JINGFEI	TITLE:Water Cooled Fan Coil Unit LSFP TYPE		
MODEL: LSFP 135AWI		DRAWING NO.: 01	ISSUE: 01	SHEET SIZE: A4

Packaged Air Handling Unit -Horizontal Model LSFP135

Diagrams of: LSFP 135AWII

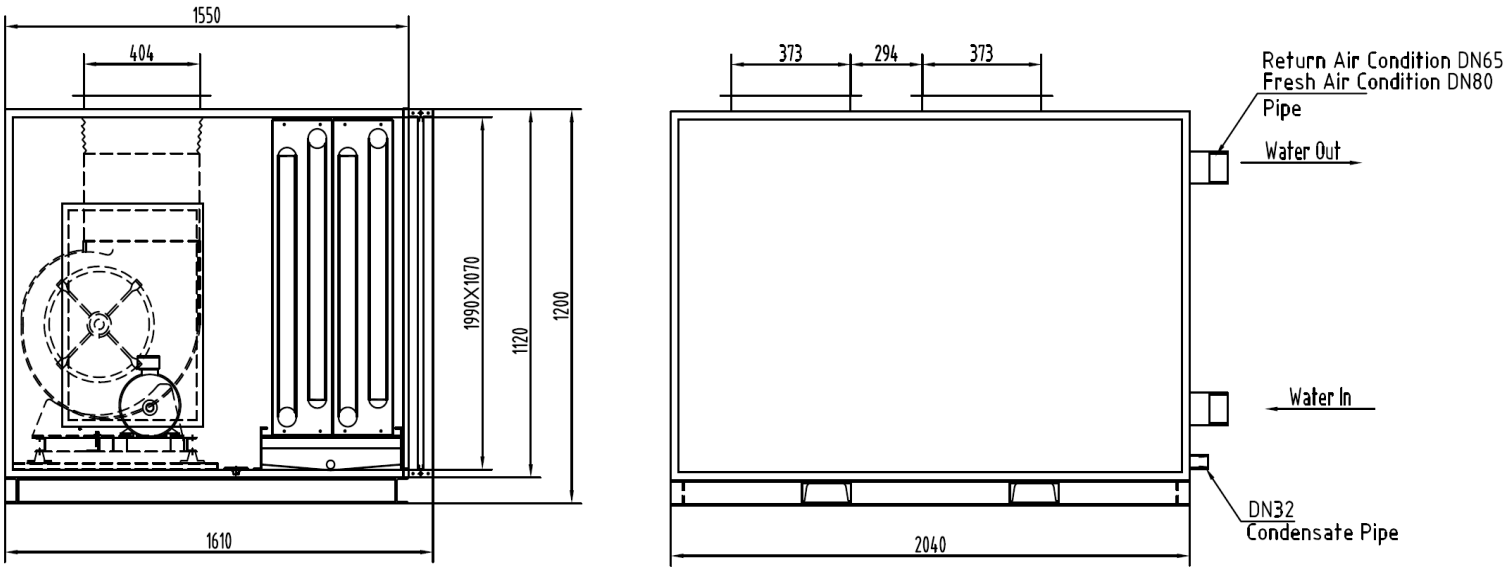

Air Flow l/s.	3750					
External Overbottom Pressure Pa	200		300		370	
Coil Rows:Cooling+Heating	4+1	6+1	4+1	6+1	4+1	6+1
Fan Model(Drive Type)	KDFTS15-11K(Belt Drive)					
Fan Speed r/min	775	811	860	891	915	940
Motor Pulley	SPA100-2	SPB112-2	SPB112-2	SPB112-2	SPB112-2	SPB125-2
Fan pulley	SPA180-2	SPB200-2	SPB190-2	SPB180-2	SPB170-2	SPB190-2
Belt Model/Quantity	SPA1232/2	SPB1250/2	SPB1250/2	SPB1250/2	SPB1250/2	SPB1250/2
Motor Power-Pole	3KW-4	4KW-4	4KW-4	4KW-4	4KW-4	5.5KW-4
A FLA	6.2A	8.1A	8.1A	8.1A	8.1A	10.8A
Voltage	415V/3Ph/50HZ					
Coil Diameter mm/Fins:Length×Width mm	9.52/1760×889					
Filter:Length×Width×Thickness mm/quantiay	498×529×15/8					

Note:The unit shown is of left hand type.

DRAWN BY: GUO JINGPENG	DATE: 10/11/2009	DUNNAIR		
APPROVED Q.A.: WU MEIJUN	APPROVED ENG.: ZHANG JINGFEI	TITLE:Water Cooled Fan Coil Unit LSFP TYPE		
MODEL: LSFP 135AWII		DRAWING NO.: 01	ISSUE: 01	SHEET SIZE: A4

Packaged Air Handling Unit -Horizontal Model LSFP135

Direct starting type (motor power<15W)

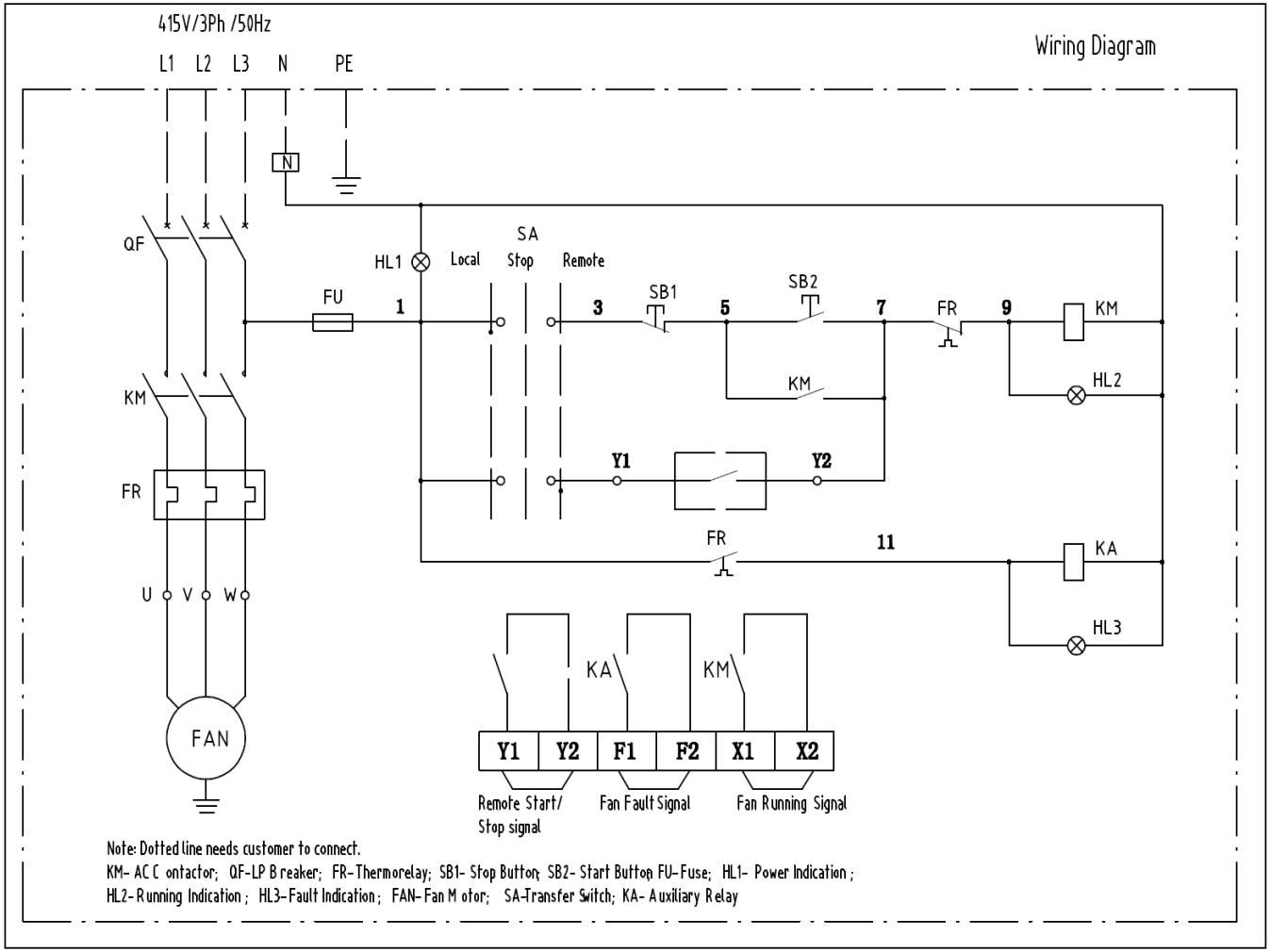

Note: Dotted line needs customer to connect.
KM- AC Contactor; QF-LP Breaker; FR-Thermorelay; SB1- Stop Button; SB2- Start Button; FU-Fuse; HL1- Power Indication ; HL2-Running Indication ; HL3-Fault Indication ; FAN-Fan Motor; SA-Transfer Switch; KA- Auxiliary Relay

DRAWN BY: GUO JINGPENG	DATE: 10/11/2009	DUNNAIR		
APPROVED Q.A.: WU MEIJUN	APPROVED ENG.: ZHANG JINGFEI	TITLE:Water Cooled Fan Coil Unit LSFP TYPE		
MODEL: LSFP010-270		DRAWING NO.: 01	ISSUE: 01	SHEET SIZE: A4

Packaged Air Handling Unit *Horizontal Model LSFP135*

FAN CURVE

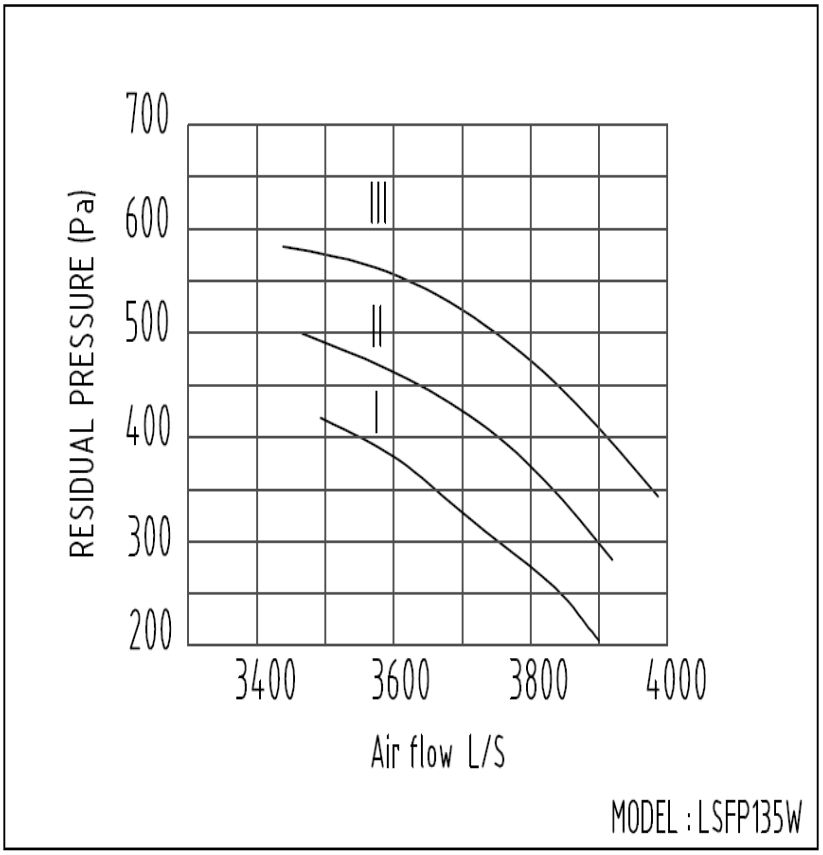

DRAWN BY: GUO JINGPENG	DATE: 10/11/2009	DUNNAIR		
APPROVED Q.A.: WU MEIJUN	APPROVED ENG: ZHANG JINGFEI	TITLE: Water Cooled Fan Coil Unit LSFP TYPE		
MODEL: LSFP135W		DRAWING NO.: 01	ISSUE: 01	SHEET SIZE: A4
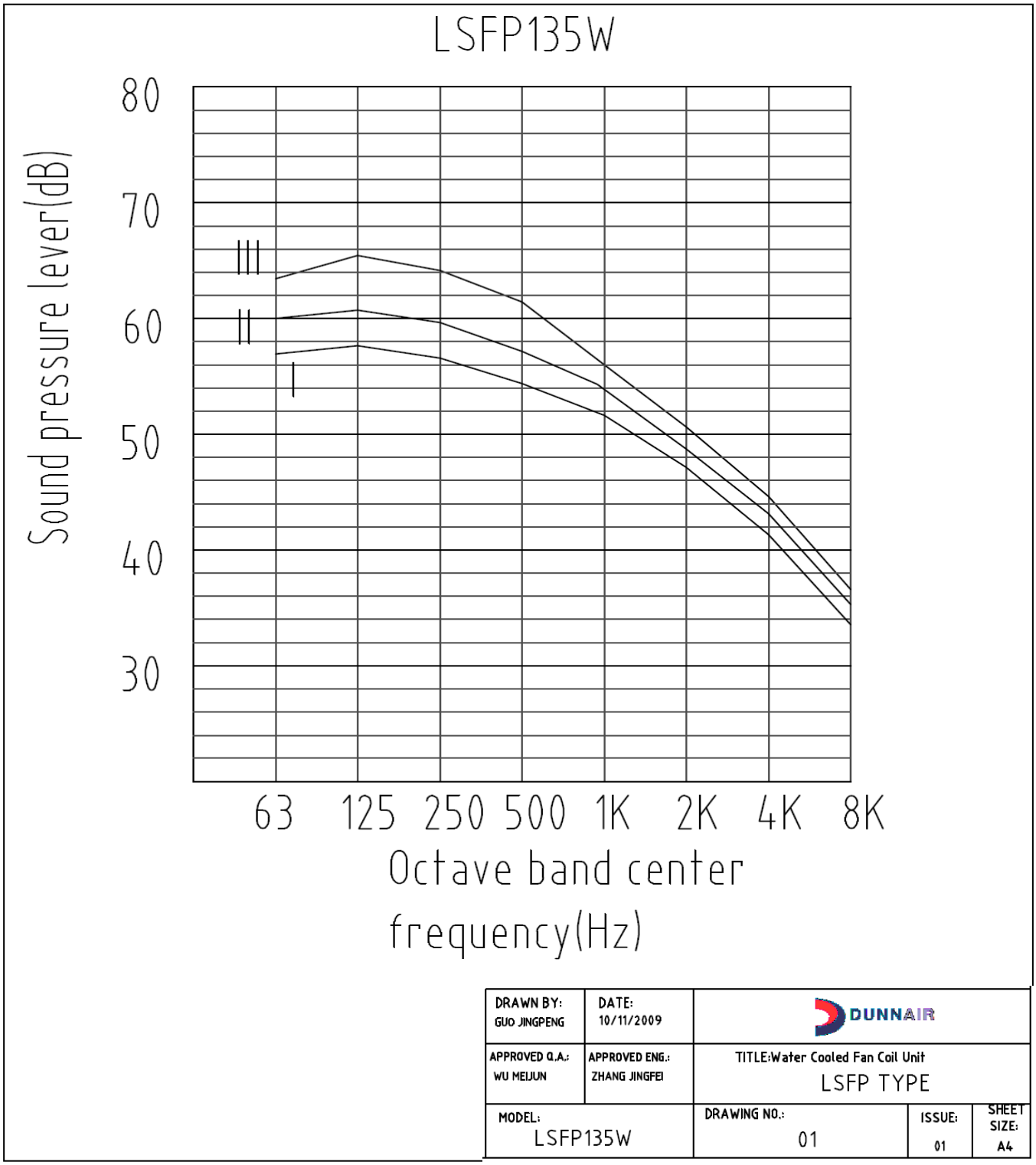
Packaged Air Handling Unit *Horizontal Model LSFP135*