Packaged Air Handling Unit
LSFP Series
LSFP80

Model Number Configuration

LSFP80-LI-4+1	:	4 + 1 Row: Vertical Model: Horizontal air discharge
LSFP80-LII-4+1	:	4 + 1 Row: Vertical Model: Vertical air discharge
LSFP80-ALI-4+1	:	4 + 1 Row: Vertical Model: Horizontal air discharge with fan turn 180°
LSFP80-ALII-4+1	:	4 + 1 Row: Vertical Model: Vertical air discharge with fan turn 180°
LSFP80-LI-6+1	:	6 + 1 Row: Vertical Model: Horizontal air discharge
LSFP80-LII-6+1	:	6 + 1 Row: Vertical Model: Vertical air discharge
LSFP80-ALI-6+1	:	6 + 1 Row: Vertical Model: Horizontal air discharge with fan turn 180°
LSFP80-ALII-6+1	:	6 + 1 Row: Vertical Model: Vertical air discharge with fan turn 180°

LI
Vertical Model with Horizontal air discharge

ALI
Vertical Model with fan turn 180° and Horizontal air discharge

LII
Vertical Model with Vertical air discharge

ALII
Vertical Model with fan turn 180° and Vertical air discharge

Packaged Air Handling Unit *Vertical Model LSFP80*

PERFORMANCE DATA

RETURN AIR

Model	Row	Air Flow	4 Rows Cooling				1 Row Heating			External Excess Pressure			Motor Power			Unit Weight	
			Total	Sensible	Water Flow	Water Resistance	Rated Heating	Water Flow	Water Resistance	I	II	III	I	II	III	Horizontal	Vertical
		l/s	kW	kW	l/s	kPa	kW	l/s	kPa	Pa	Pa	Pa	kW	kW	kW	kg	kg
LSFP80-4+1	4+1	2222	50.8	35.5	2.4	20.4	31.8	0.8	23.8	180	250	350	1.5	2.2	3	288	307
LSPF80-6+1	6+1	2222	61.6	41.3	2.9	14.1	31.8	0.8	23.8	180	250	350	2.2	3	3	328	359

Notes for Return Air:

1. Cooling: The water in/out temp.is 7°C/12°C; the air in temp. is 27°C DB / 19.5°C WB
2. Heating: The water in/out temp. is 60°C/50°C; the air in temp. is 21°C DB.
3. The motor power offered is the motor output power.
4. The above performance is for reference only. Different air and water conditions would lead to different cooling capacity.

SPECIFICATION

- **Coil:**
  LSFP010L-LSFP 120L : φ 9.52mm, copper tube, aluminum fins
  LSFP135L-LSFP 300L: φ 12.7mm, copper tube, aluminum fins
- **Fan and motor:**
  LSFP 010L-LSFP 025L: direct driven, forward curved centrifugal fan
  LSFP 030L-LSFP 300L: belt driven, forward curved centrifugal fan
- **Filter: 15mm panel filter**
- **Cabinet: 25mm thick double skinned panel**
- **Drip-tray: powder painting steel sheet**

Packaged Air Handling Unit -Vertical Model LSFP80

Diagrams of: LSFP 080LI

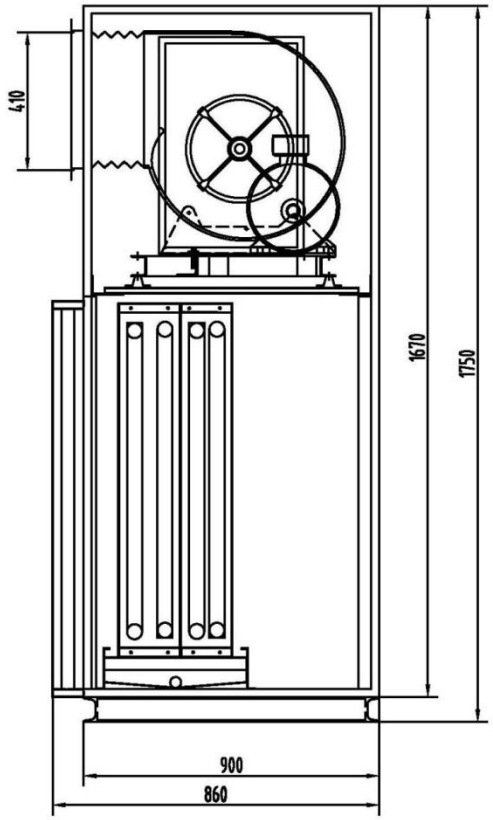

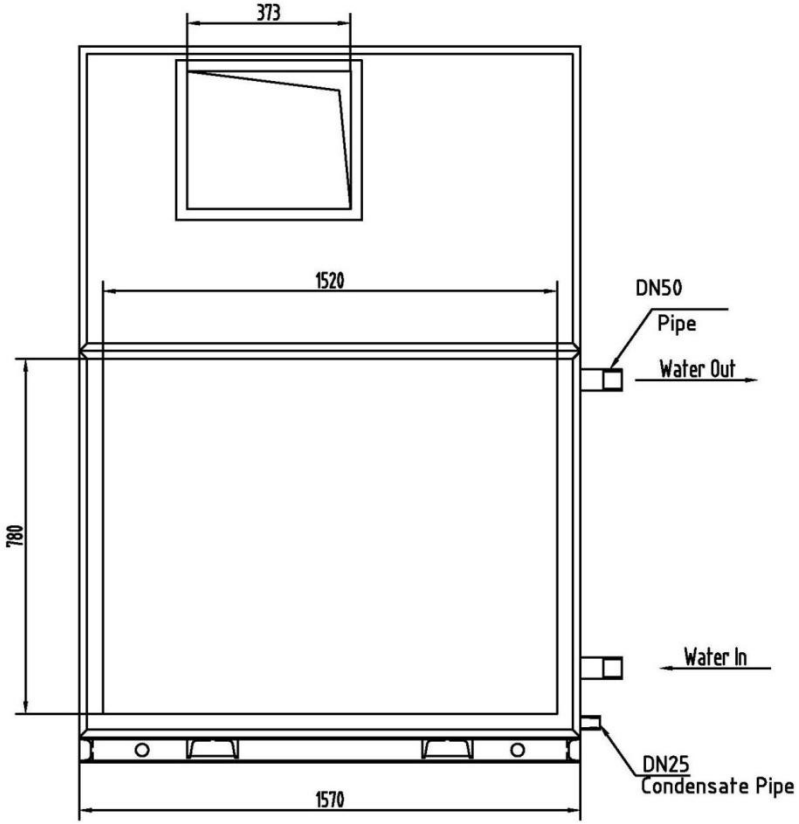

Air Flow L/s.	2222					
External Overbotton Pressure Pa	100		250		350	
Coil Rows:Cooling-Heating	6+1	6+1	6+1	6+1	6+1	6+1
Fan Model:Drive Type	KDFT15-TL:Belt Drive					
Fan Speed r/min	750	798	832	855	898	920
Motor Pulley	SPA90-1	SPA95-2	SPA95-2	SPA95-2	SPA95-2	SPA100-2
Fan pulley	SPA170-1	SPA150-2	SPA160-2	SPA160-2	SPA150-2	SPA150-2
Belt Model/Quantity	SPA1107/1	SPA1062/2	SPA1132/2	SPA1082/2	SPA1060/2	SPA1082/2
Motor Power-Pole	1.5KW-4	2.2KW-4	2.2KW-4	3KW-4	3KW-4	3KW-4
A F L A	3.4A	4.7A	4.7A	6.2A	6.2A	6.2A
Voltage	415V/3Ph/50HZ					
Coil Diameter mm/Fins:Length×Width mm	ϕ9.52/1296×711					
Filter:Length×Width×Thickness mm/quantity	597×714×15/3					

Note:The unit shown is of right hand type.

DRAWN BY: GUO JINGPENG	DATE: 24/04/2010	DUNNAIR
APPROVED Q.A.: WU MEIJUN	APPROVED ENG.: ZHANG JINGFEI	TITLE:Water Cooled Fan Coil Unit LSFP TYPE
MODEL: LSFP 080LI	DRAWING NO.: 01	ISSUE: 01 / SHEET SIZE: A4

DUNNAIR (Aust) Pty Ltd

Mar 2011

Packaged Air Handling Unit - Vertical Model LSFP80

DUNNAIR (Aust) Pty Ltd

Diagrams of: LSFP 080LII

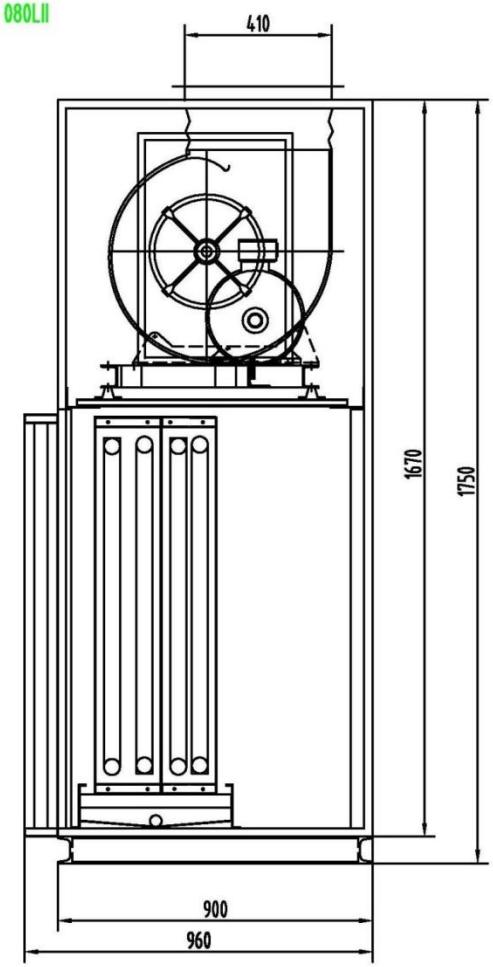

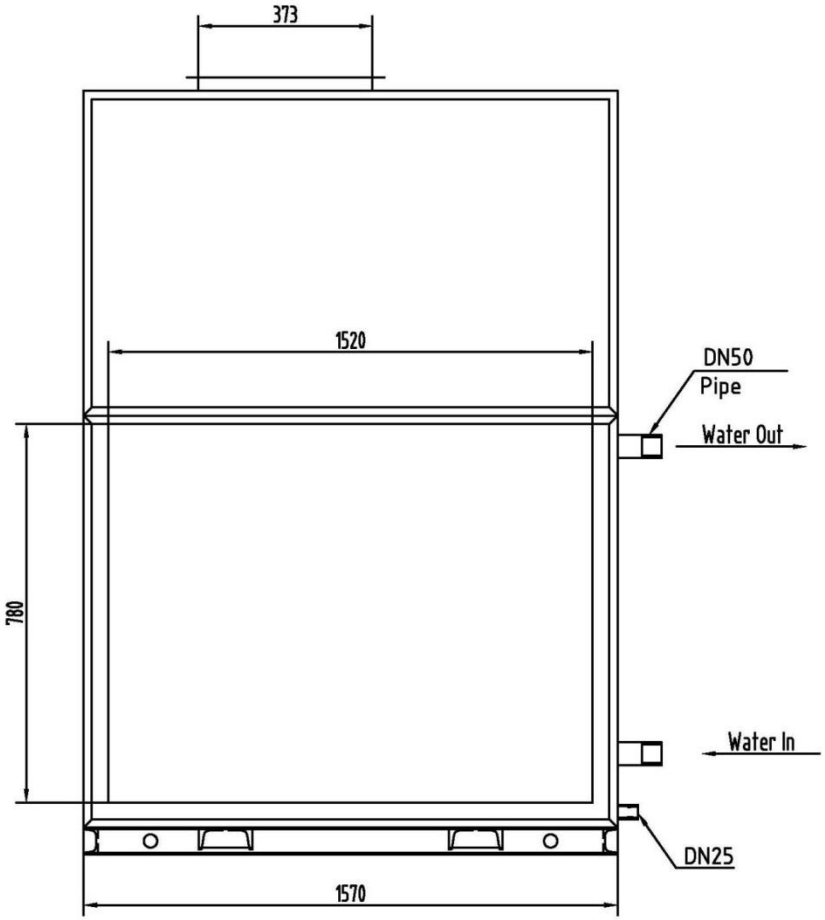

Air Flow L/s.	2222					
External Overbottom Pressure Pa	180		250		350	
Coil Rows:Cooling+Heating	4+1	6+1	4+1	6+1	4+1	6+1
Fan Model(Drive Type)	KDFT15-11L(Belt Drive)					
Fan Speed r/min	750	790	832	855	890	920
Motor Pulley	SPA90-1	SPA85-2	SPA85-2	SPA95-2	SPA95-2	SPA100-2
Fan pulley	SPA170-1	SPA150-2	SPA140-2	SPA160-2	SPA150-2	SPA150-2
Belt Model/Quantity	SPA1987/1	SPA1962/2	SPA1832/2	SPA1982/2	SPA1860/2	SPA1982/2
Motor Power-Pole	1.5KW-4	2.2KW-4	2.2KW-4	3KW-4	3KW-4	3KW-4
A F.L.A	3.4A	4.7A	4.7A	6.2A	6.2A	6.2A
Voltage	415V/3Ph/50HZ					
Coil Diameter mm/Fins:Length×Width mm	ϕ9.52/1290×711					
Filter:Length×Width×Thickness mm/quantity	587×774×15/3					

Note:The unit shown is of right hand type.

DRAWN BY: GUO JINGPENG	DATE: 24/04/2010	DUNNAIR
APPROVED Q.A.: WU MEIJUN	APPROVED ENG.: ZHANG JINGFEI	TITLE:Water Cooled Fan Coil Unit LSFP TYPE
MODEL: LSFP 80LII	DRAWING NO.: 01	ISSUE: 01 / SHEET SIZE: A4

Packaged Air Handling Unit - Vertical Model LSFP80

Diagrams of: LSFP 080ALI

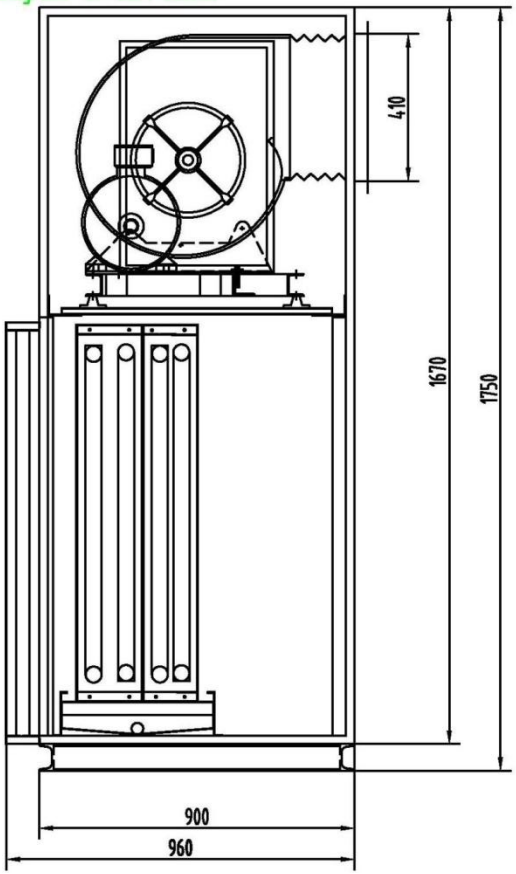

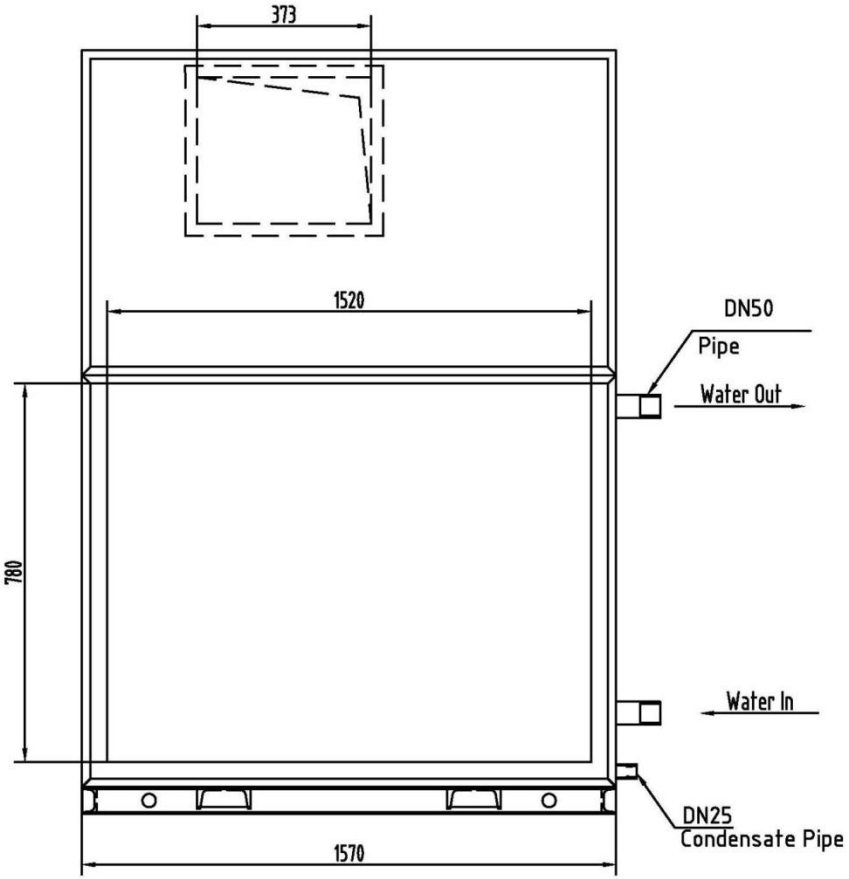

Air Flow L/s.	2222					
External Overbottom Pressure Pa	180		250		350	
Coil Rows.Cooling+Heating	4+1	6+1	4+1	6+1	4+1	6+1
Fan Model(Drive Type)	KDFT15-11.Belt Drive.					
Fan Speed r/min	750	790	832	855	890	920
Motor Pulley	SPA90-1	SPA115-2	SPA115-2	SPA125-2	SPA125-2	SPA100-2
Fan pulley	SPA170-1	SPA150-2	SPA140-2	SPA160-2	SPA150-2	SPA150-2
Belt Model/Quantity	SPA1107/1	SPA1062/2	SPA1032/2	SPA1082/2	SPA1060/2	SPA1082/2
Motor Power-Pole	1.5KW-4	2.2KW-4	2.2KW-4	3KW-4	3KW-4	3KW-4
A FLA	3.4A	4.7A	4.7A	6.2A	6.2A	6.2A
Voltage	415V/3Ph/50HZ					
Coil Diameter mm/Fins.Length×Width mm	ϕ9.52/1298×711					
Filter.Length×Width×Thickness mm/quantity	507×774×15/3					

Note:The unit shown is of right hand type.

DRAWN BY: GUO JINGPENG	DATE: 24/04/2010	DUNNAIR		
APPROVED Q.A.: WU MEIJUN	APPROVED ENG.: ZHANG JINGFEI	TITLE:Water Cooled Fan Coil Unit LSFP TYPE		
MODEL: LSFP 080ALI		DRAWING NO.: 01	ISSUE: 01	SHEET SIZE: A4

Packaged Air Handling Unit - Vertical Model LSFP80

Diagrams of: LSFP 080ALII

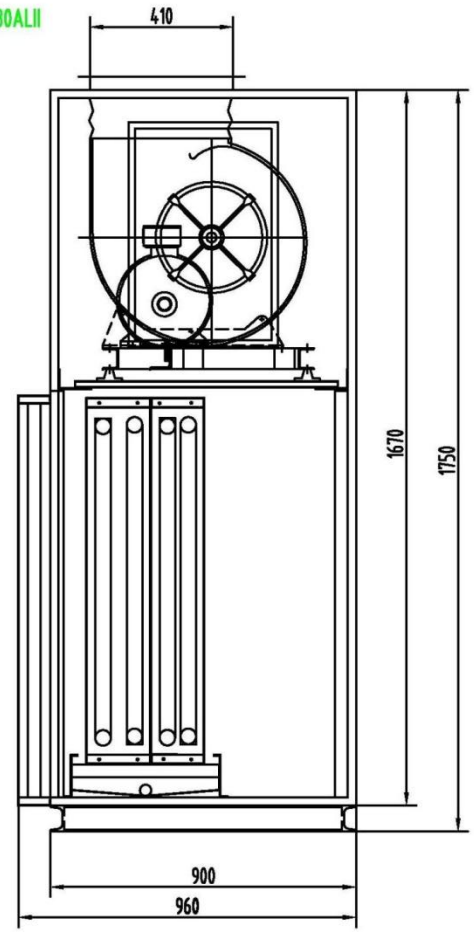

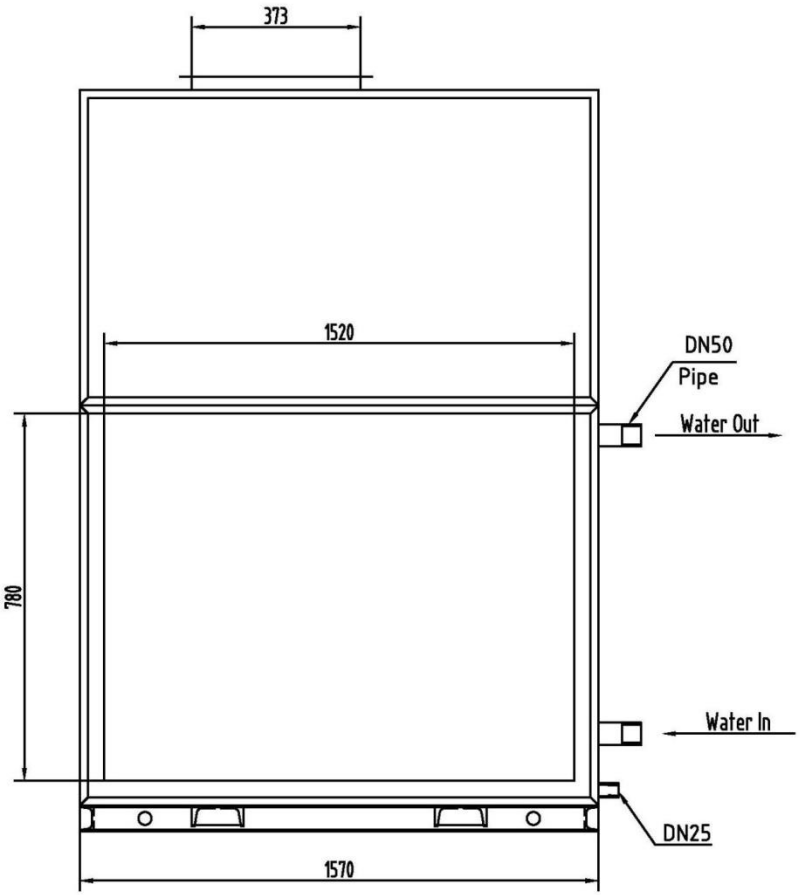

Condensate Pipe

Air Flow L/s.	2222					
External Overbottom Pressure Pa	100		250		350	
Coil Rows:Cooling+Heating	4+1	6+1	4+1	6+1	4+1	6+1
Fan Model(Drive Type)	KDFT15-11,Belt Drive,					
Fan Speed r/min	758	798	832	855	890	920
Motor Pulley	SPA90-1	SPA95-2	SPA95-2	SPA95-2	SPA95-2	SPA100-2
Fan pulley	SPA170-1	SPA150-2	SPA140-2	SPA160-2	SPA150-2	SPA150-2
Belt Model/Quantity	SPA1107/1	SPA1062/2	SPA1037/2	SPA1062/2	SPA1060/2	SPA1062/2
Motor Power-Pole	1.5KW-4	2.2KW-4	2.2KW-4	3KW-4	3KW-4	3KW-4
A FLA	3.4A	4.7A	4.7A	6.2A	6.2A	6.2A
Voltage	415V/3Ph/50HZ					
Coil Diameter mm/Fins:Length×Width mm	6952/1298×711					
Filter:Length×Width×Thickness mm/quantity	507×774×15/3					

Note:The unit shown is of right hand type.

DRAWN BY: GUO JINGPENG	DATE: 24/04/2010	DUNNAIR		
APPROVED Q.A.: WU MEIJUN	APPROVED ENG.: ZHANG JINGFEI	TITLE:Water Cooled Fan Coil Unit LSFP TYPE		
MODEL: LSFP 080ALII		DRAWING NO.: 01	ISSUE: 01	SHEET SIZE: A4

Packaged Air Handling Unit - Vertical Model LSFP80

Direct starting type (motor power < 15KW)

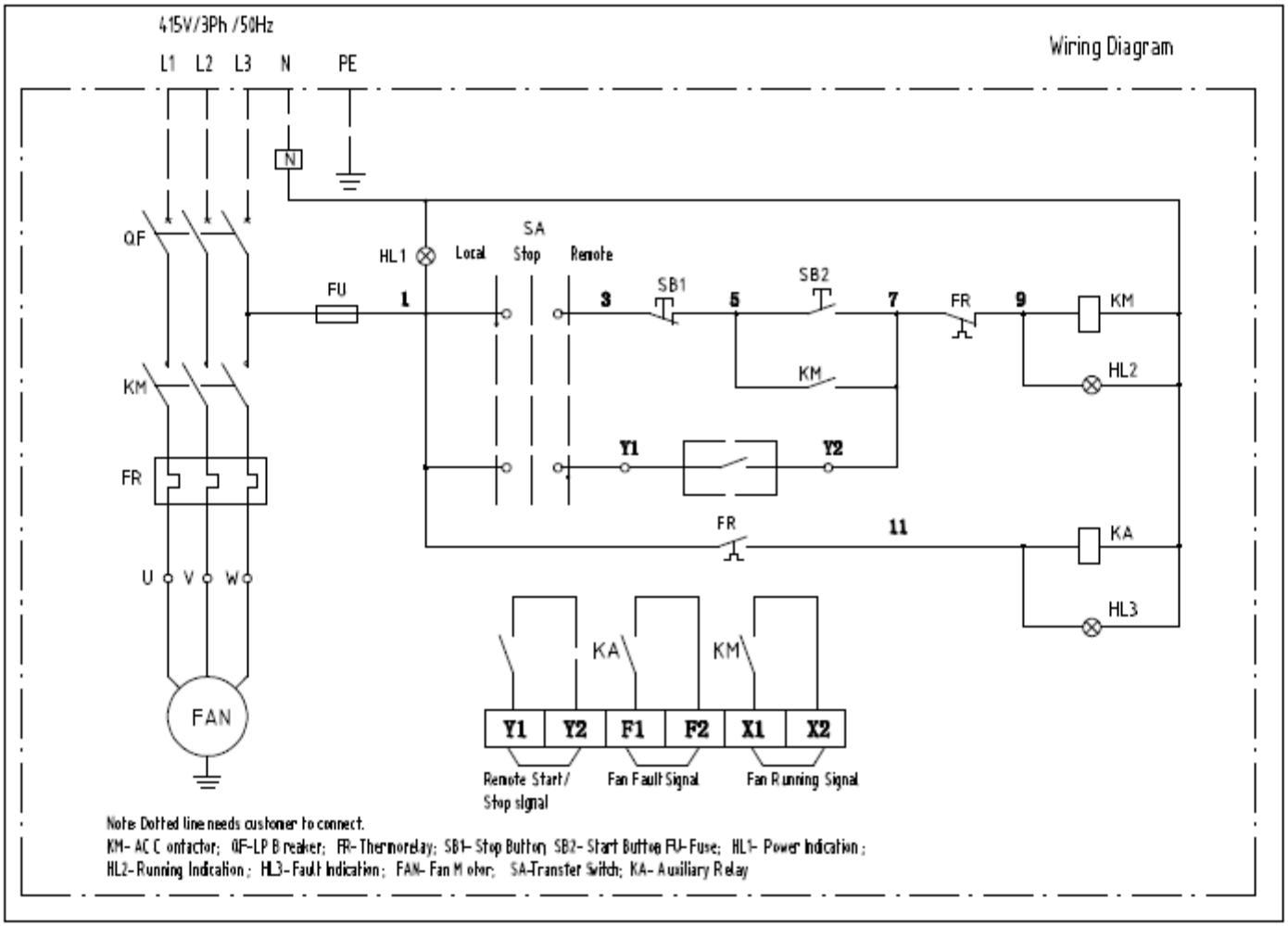

Note: Dotted line needs customer to connect.
KM- AC Contactor; QF-LP Breaker; FR-Thermorelay; SB1- Stop Button; SB2- Start Button; FU-Fuse; HL1- Power Indication;
HL2-Running Indication; HL3-Fault Indication; FAN- Fan Motor; SA-Transfer Switch; KA- Auxiliary Relay

DRAWN BY: GUO JINGPENG	DATE: 10/11/2009	DUNNAIR		
APPROVED Q.A: WU MELUN	APPROVED ENG: ZHANG JINGFEI	TITLE: Water Cooled Fan Coil Unit LSFP TYPE		
MODEL: LSFP010-300		DRAWING NO.: 01	ISSUE: 01	SHEET SIZE: A4

Packaged Air Handling Unit *Vertical Model LSFP80*

FAN CURVE

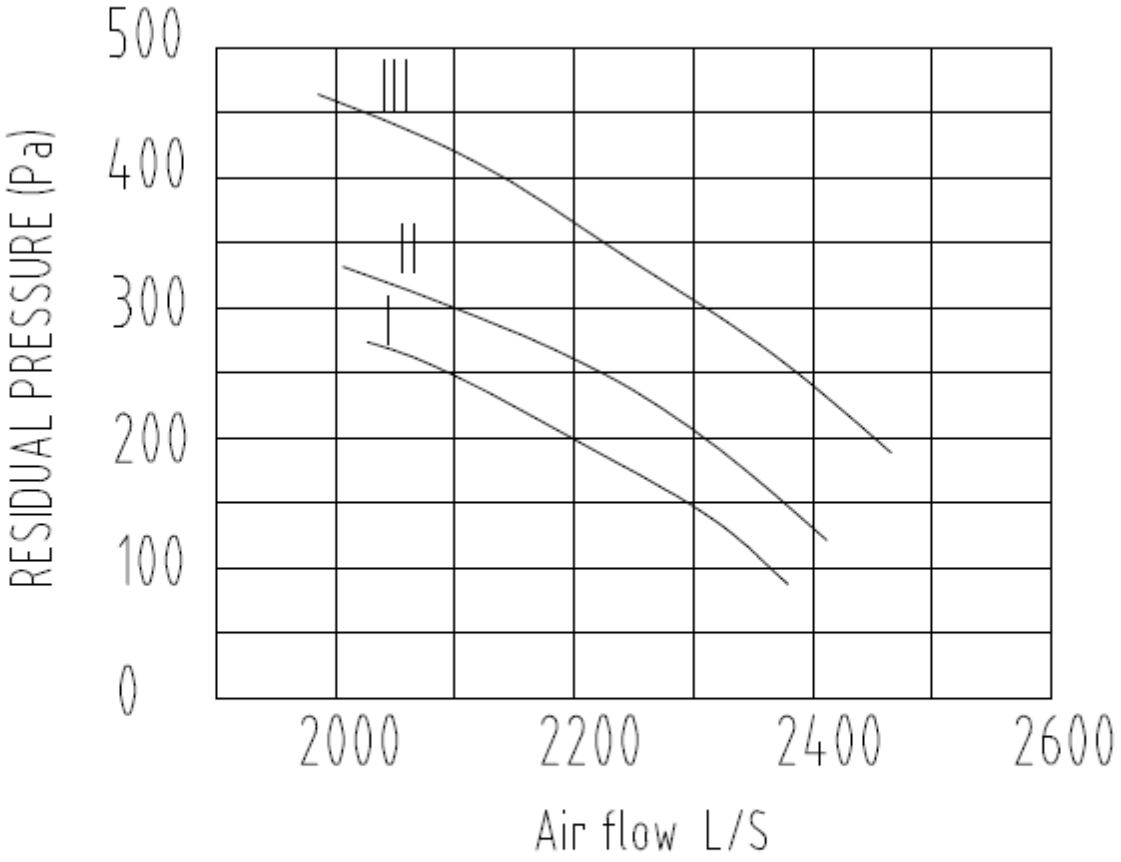

DRAWN BY: GUO JINGPENG	DATE: 10/11/2009	DUNNAIR		
APPROVED Q.A.: WU MEIJUN	APPROVED ENG: ZHANG JINGFEI	TITLE: Water Cooled Fan Coil Unit LSFP TYPE		
MODEL: LSFP080L		DRAWING NO.: 01	ISSUE: 01	SHEET SIZE: A4

Packaged Air Handling Unit *Vertical Model LSFP80*

NOISE CURVE

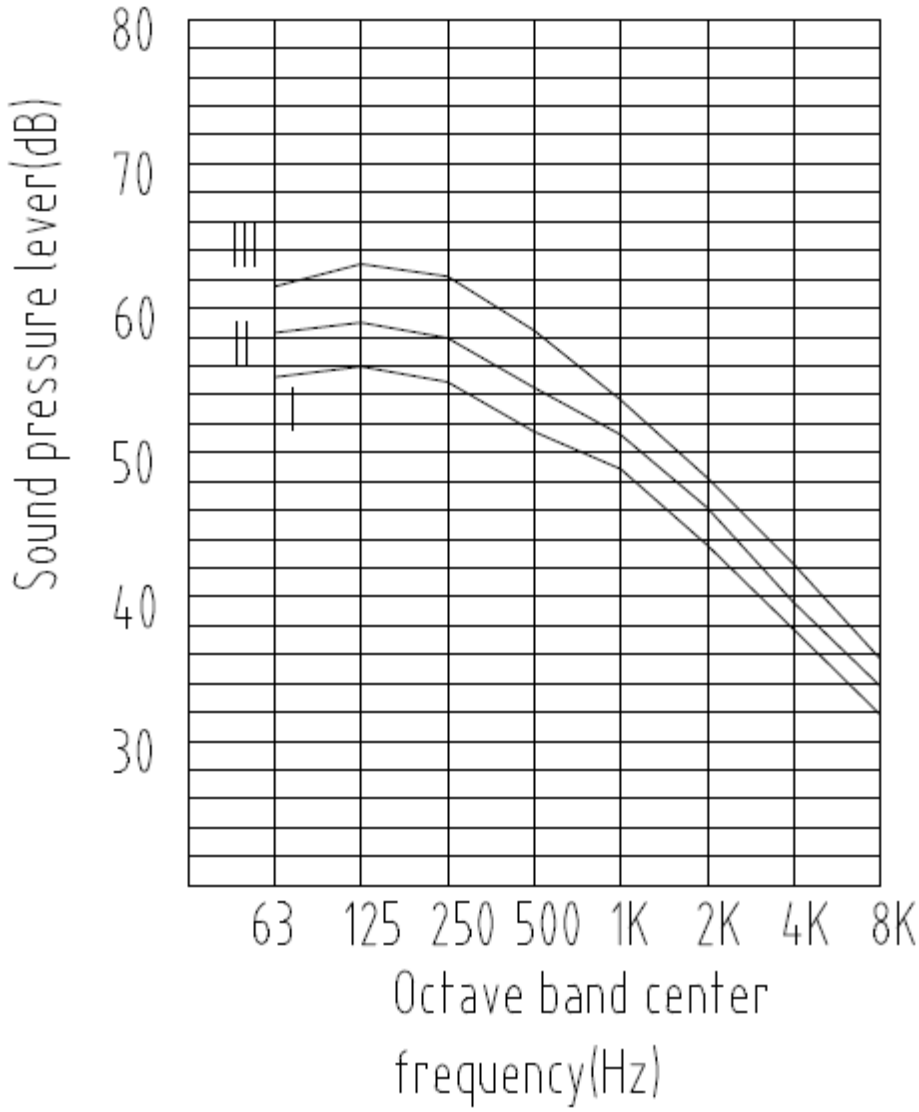

DRAWN BY: GUO JINGPENG	DATE: 10/11/2009	DUNNAIR		
APPROVED Q.A.: WU HELUN	APPROVED ENG.: ZHANG JINGFEI	TITLE:Water Cooled Fan Coil Unit LSFP TYPE		
MODEL: LSFP080L		DRAWING NO.: 01	ISSUE: 01	SHEET SIZE: A4