Ceiling Mount Air Handling Units
FPS Series
FPS150

MODEL NUMBER CONFIGURATION

RETURN AIR TYPE

FPS150AM: 4 Row; Standard Coil; Standard Fan
FPS150AT: 4 Row; Standard Coil; High Static Pressure Fan
FPS150AQ: 6 Row; High Efficiency Coil; Standard Fan
FPS150AY: 6 Row; High Efficiency Coil; High Static Pressure Fan

PERFORMANCE DATA

RETURN AIR

Model	Row	Air Flow	Pressure	Noise	Rated Cooling Capacity	Rated Heating Capacity	Water Flow	Water Resistance	Power	Weight
		L/S	dB(A)	dB(A)	kW	kW	L/S	kPa	kW	kg
FPS150AM	4	4167	320	64	96.90	157.30	4.59	92	1.50*2	397
FPS150AT	4	4167	450	69	96.90	157.30	4.59	92	3.00*2	399
FPS150AQ	6	4167	250	64	117.40	173.90	5.62	66	1.5*2	424
FPS150AY	6	4167	400	69	117.40	173.90	5.62	66	3.00*2	426

Notes for Return Air:

1. Cooling: Entering air temp. 27℃ DB 19.5 ℃ WB, water inlet 7 ℃, water outlet 12℃.
2. Heating: Entering air temp. 21℃ DB 60 ℃ WB, water flow rate of heating system is as same as cooling system.

SPECIFICATION

- Cabinet: single skinned panel
- Coil: φ 9.52mm, copper tube, aluminum fins
- Drip Tray: powder painting steel sheet
- Fan and Motor: direct driven, forward curved centrifugal fan
  415V/3Ph/50Hz external-rotor motor

FRESH AIR TYPE

FPS150AN: 4 Row; Standard Coil; Standard Fan
FPS150AP: 4 Row; Standard Coil; High Static Pressure Fan
FPS150AU: 6 Row; High Efficiency Coil; Standard Fan
FPS150AX: 6 Row; High Efficiency Coil; High Static Pressure Fan

PERFORMANCE DATA

FRESH AIR

Model	Row	Air Flow	Pressure	Noise	Rated Cooling Capacity	Rated Heating Capacity	Water Flow	Water Resistance	Power	Weight
		L/S	dB(A)	dB(A)	kW	kW	L/S	kPa	kW	kg
FPS150AN	4	4167	320	64	211.50	219.10	8.92	61	1.50*2	397
FPS150AP	4	4167	450	68	211.50	219.10	8.92	61	3.00*2	399
FPS150AU	6	4167	250	64	258.70	241.40	12.37	54	1.50*2	424
FPS150AX	6	4167	400	68	258.70	241.40	12.37	54	3.00*2	426

Notes for Fresh Air:

1. Cooling: Entering air temp. 35℃ DB 28 ℃ WB, water inlet 7 ℃, water outlet 12℃.
2. Heating: Entering air temp. 7℃ DB 60 ℃ WB, water flow rate of heating system is the same as cooling system.

SPECIFICATION

- Cabinet: single skinned panel
- Coil: φ 9.52mm, copper tube, aluminum fins
- Drip Tray: powder painting steel sheet
- Fan and Motor: direct driven, forward curved centrifugal fan
  415V/3Ph/50Hz external-rotor motor

FPS Series Ceiling Mount Air Handling Unit PS150

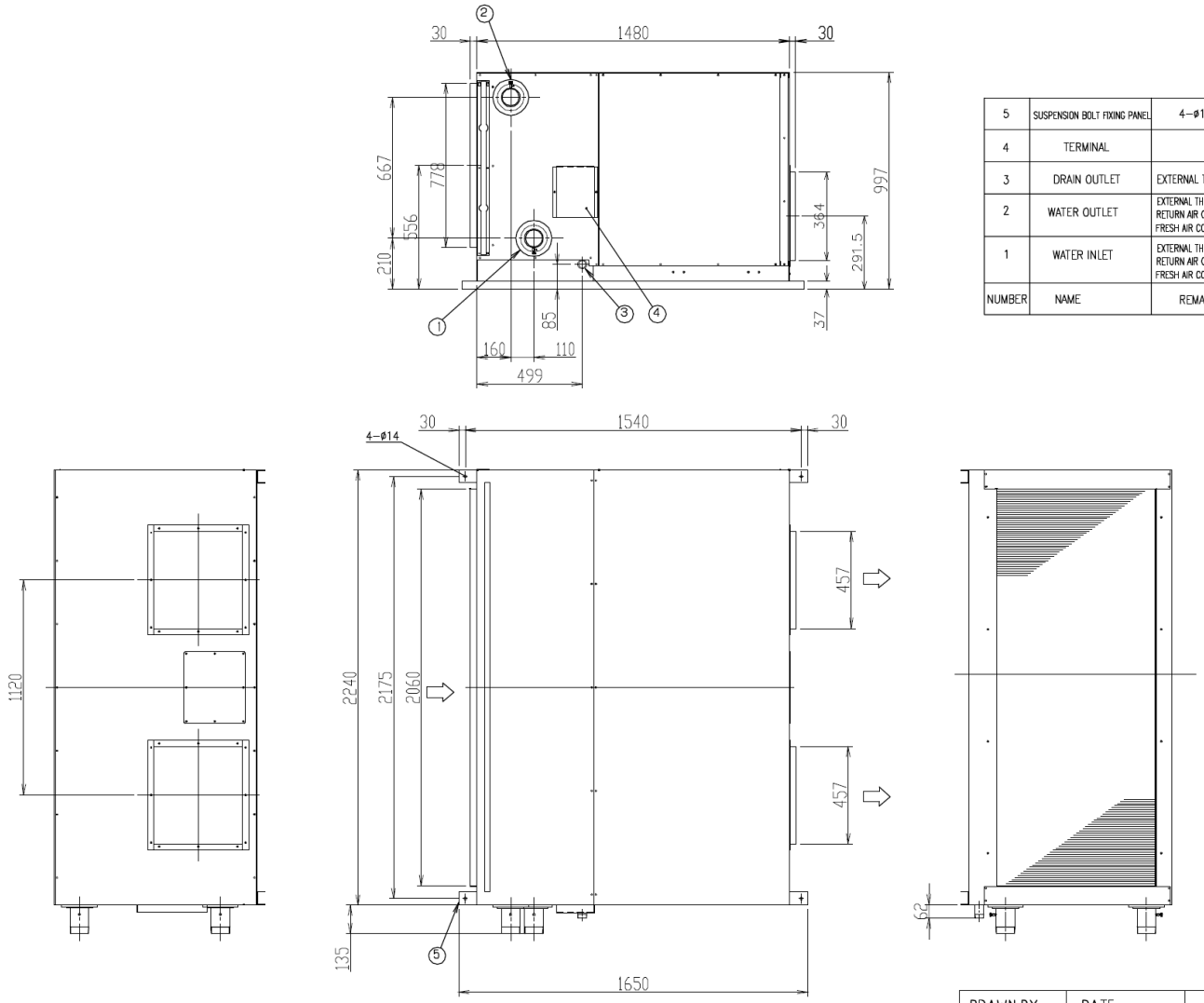

NUMBER	NAME	REMARK
5	SUSPENSION BOLT FIXING PANEL	4-ø14
4	TERMINAL	
3	DRAIN OUTLET	EXTERNAL THREAD 1 $\frac{1}{4}$"
2	WATER OUTLET	EXTERNAL THREAD RETURN AIR CONDITION 2" FRESH AIR CONDITION 2 $\frac{1}{2}$"
1	WATER INLET	EXTERNAL THREAD RETURN AIR CONDITION 2" FRESH AIR CONDITION 2 $\frac{1}{2}$"

DRAWN BY: GUO JINGPENG	DATE: 23/11/2009	DUNNAIR	
APPROVED Q.A.: WU MEIJUN	APPROVED ENG.: ZHANG JINGFEI	TITLE: Water Cooled Fan Coil Unit FPS TYPE	
MODEL: FPS150A(N,U,M,Q)		DRAWING NO.: 01	ISSUE: 01 / SHEET SIZE: A4

FPS Series Ceiling Mount Air Handling Unit PS150

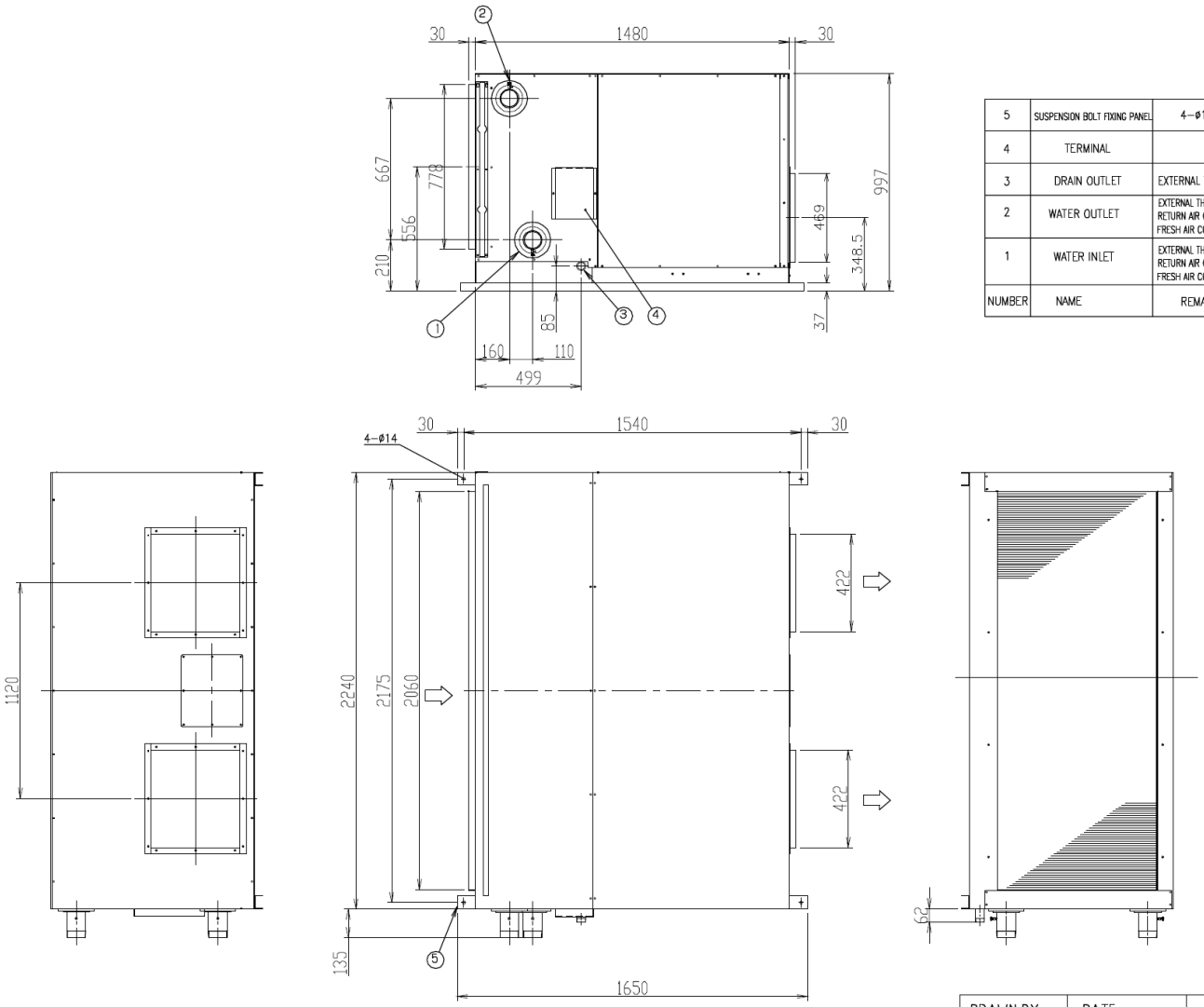

NUMBER	NAME	REMARK
5	SUSPENSION BOLT FIXING PANEL	4-Ø14
4	TERMINAL	
3	DRAIN OUTLET	EXTERNAL THREAD 1 $\frac{1}{4}$"
2	WATER OUTLET	EXTERNAL THREAD RETURN AIR CONDITION 2" FRESH AIR CONDITION 2 $\frac{1}{2}$"
1	WATER INLET	EXTERNAL THREAD RETURN AIR CONDITION 2" FRESH AIR CONDITION 2 $\frac{1}{2}$"

DRAWN BY: GUO JINGPENG	DATE: 23/11/2009	DUNNAIR		
APPROVED Q.A.: WU MEIJUN	APPROVED ENG.: ZHANG JINGFEI	TITLE: Water Cooled Fan Coil Unit FPS TYPE		
MODEL: FPS150A(P,X,T,Y)		DRAWING NO.: 01	ISSUE: 01	SHEET SIZE: A4

FPS Series Ceiling Mount *Air Handling Units FPS150*

Wiring Diagram

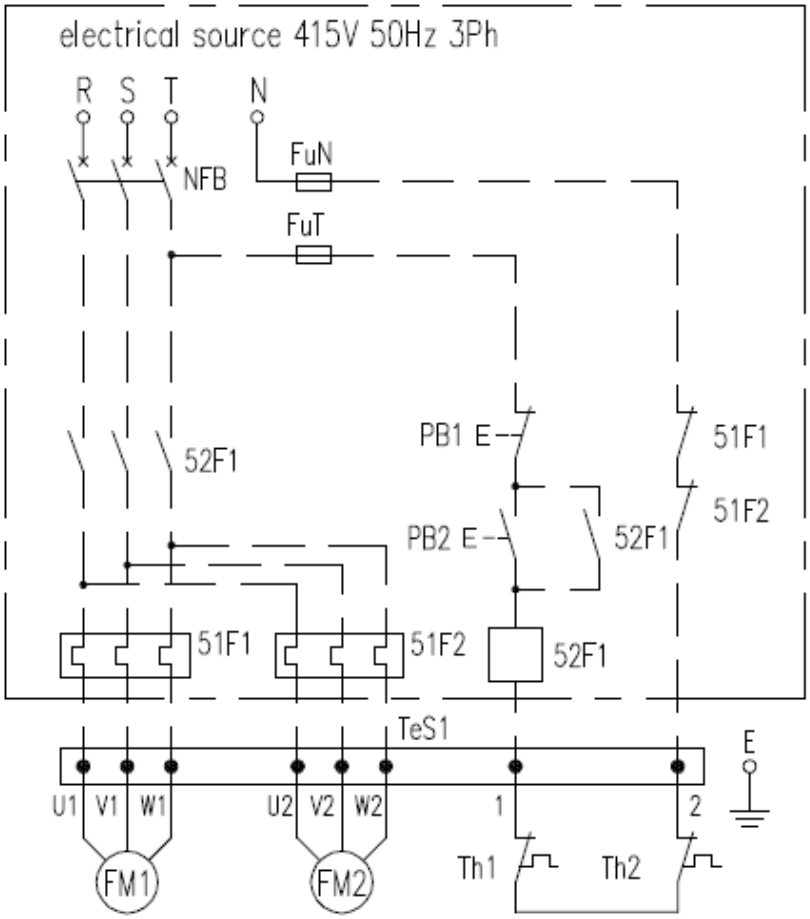

MARK	NAME
FM1,2	Motor
TH1,2	Terminal Overload Protection
TeS1	Terminal Block
Wiring by others	
MARK	NAME
NFB	Air Switch
FuN,T	Fuse
52F1	Contactor
51F1,2	Thermal Overload Relays
PB1	Pushbutton (Stop)
PB2	Pushbutton (Run)

NOTE) — —Stands for wiring connection on the spot.

DRAWN BY: GUO JINGPENG	DATE: 23/11/2009	DUNNAIR		
APPROVED Q.A.: WU MEIJUN	APPROVED ENG.: ZHANG JINGFEI	TITLE:Water Cooled Fan Coil Unit FPS TYPE		
MODEL: FPS40-150		DRAWING NO.: 01	ISSUE: 01	SHEET SIZE: A4

FPS Series Ceiling Mount *Air Handling Units FPS150*

FAN CURVE

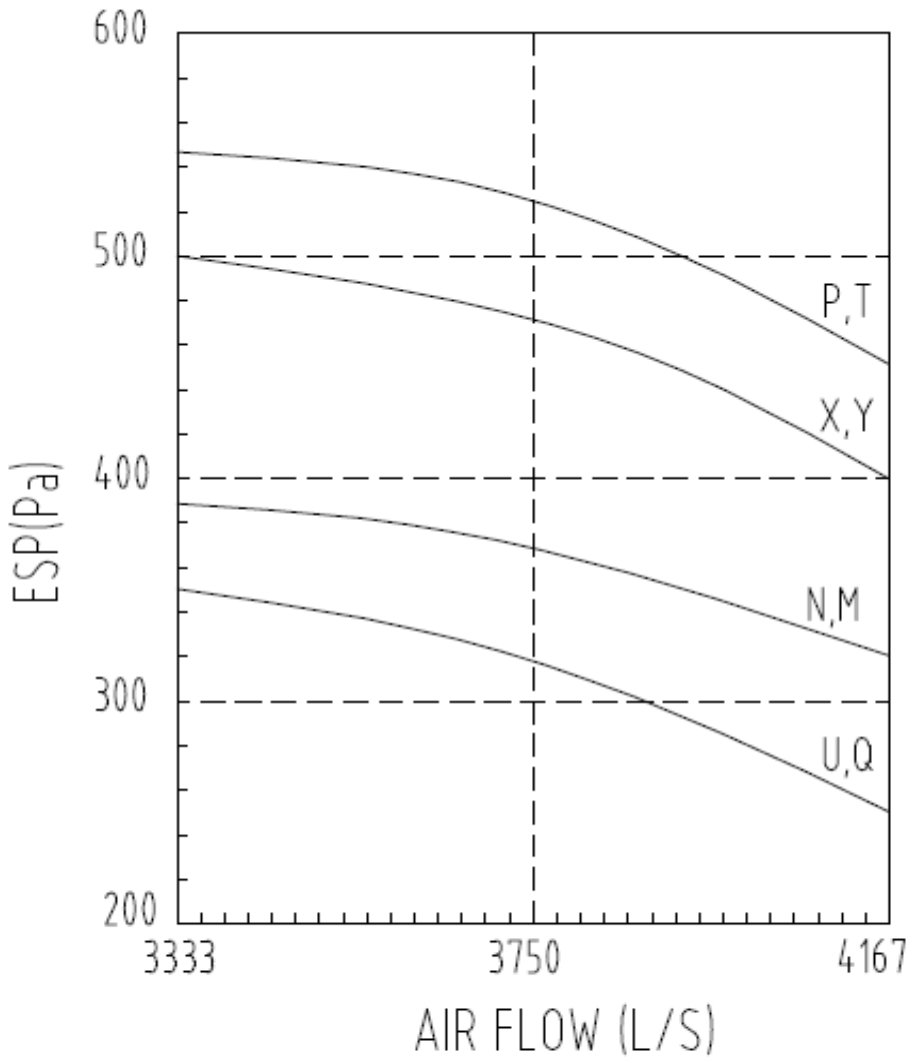

DRAWN BY: GUO JINGPENG	DATE: 23/11/2009	DUNNAIR		
APPROVED Q.A.: WU MEIJUN	APPROVED ENG.: ZHANG JINGFEI	TITLE: Water Cooled Fan Coil Unit FPS TYPE		
MODEL: FPS150		DRAWING NO.: 01	ISSUE: 01	SHEET SIZE: A4

FPS Series Ceiling Mount *Air Handling Units FPS150*

NOISE CURVE

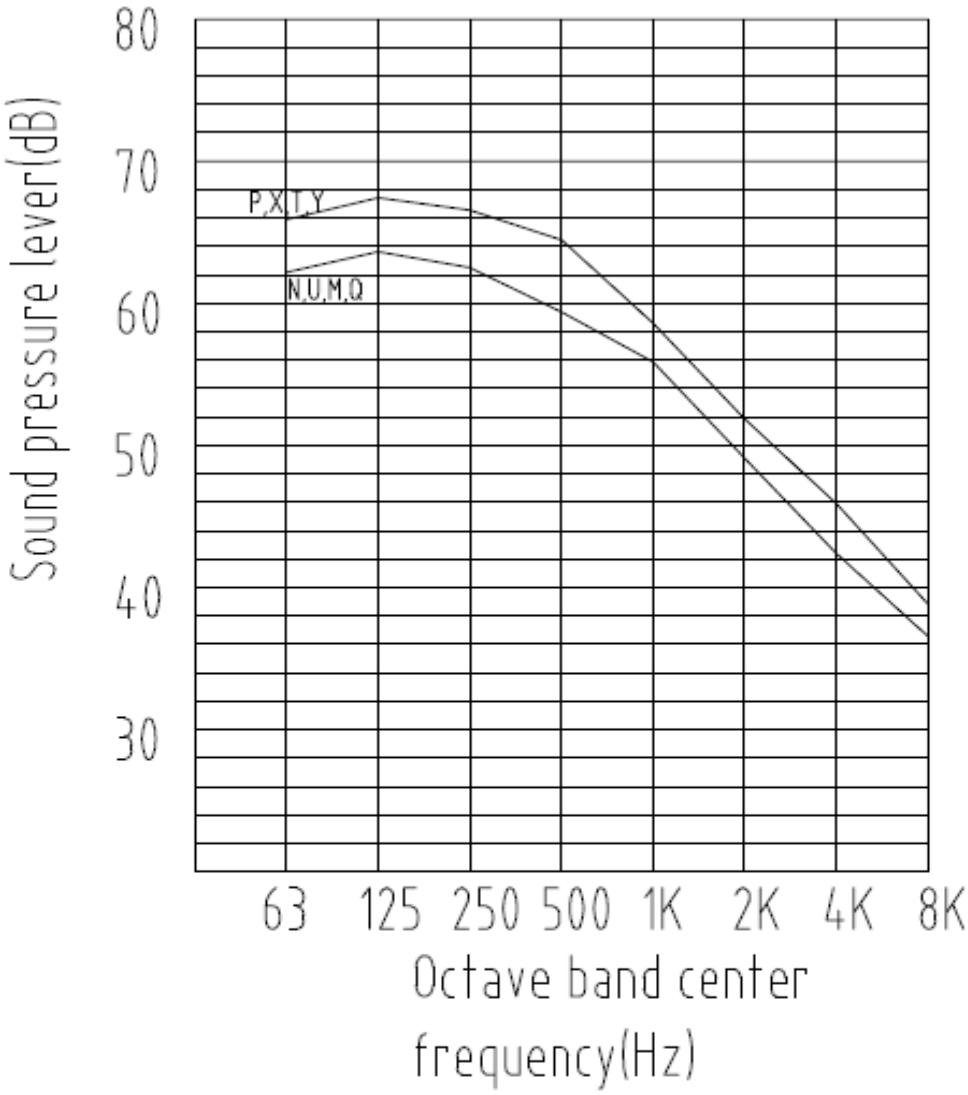

DRAWN BY: GUO JINGPENG	DATE: 23/11/2009	DUNNAIR		
APPROVED Q.A.: WU MEIJUN	APPROVED ENG.: ZHANG JINGFU	TITLE: Water Cooled Fan Coil Unit FPS TYPE		
MODEL: FPS150		DRAWING NO.: 01	ISSUE: 01	SHEET SIZE: A4